AMERICAN MOTORS

SECTION 1 —
AMBASSADOR

AMERICAN MOTORS

CONFIDENTIAL

1969 MODEL INFORMATION FILE

April 22, 1968

1969 MODEL INFORMATION FILE

This Model Information File covers the 1969 Rambler (no longer the Rambler American), Rebel, Javelin, AMX plus the new 1969 Ambassador.

This advanced, confidential information file supersedes all prior information from this office and is compiled primarily for use within the Sales, Marketing, Public Relations and Advertising Agency functions. It is designed to assist in the initial preparation of advertising, merchandising and other promotional activities. Subjects not covered can be assumed to remain basically the same as in 1968.

Indexes are found at the beginning of each Section.

Revised pages covering changes and new developments will be issued when necessary.

R. J. Molloy
Supervisor, Product Information

J. W. Voelpel
Manager, Marketing Information

1969
AMBASSADOR

TABLE OF CONTENTS

Page

New Features

- Product Highlights 1, 2
- New Exterior and Interior Styling Features 3-5
- New Chassis and Mechanical Features 6
- New Optional Equipment and Optional Equipment Changes 6
- Model and Series Availability 7
- New Safety Features 7

1969 Product

- Standard Safety Features 8, 9
- Series Features and Differentials 10-17
- Retained Standard Features 18, 19
- Engine, Transmission and Rear Axle Availability 20
- Tire Availability 21
- Factory-Installed Options 22-25
- Dealer-Installed Options and Accessories 26, 27
- Exterior Colors, Vinyl Roofs, Two-Tone Combinations and Interior Trim Selections 28-30
- Dimensions 31-34
- Competition 35

Revised 6-24-68

1969 AMBASSADOR
Product Highlights

The 1969 Ambassador has the longest wheelbase ever produced by American Motors. The new length is found both in wheelbase (now 122", was 118") and overall length. The 4-door sedan and hardtop become 206.5" in overall length with the station wagons at 207". This new Ambassador wheelbase is expected to be at least 1" longer than that of the Chevrolet, Fury (except the Fury station wagon which may be longer) and Ford. The entire SST series features exterior wood-grain trim. A new SST wagon is offered with standard wood-grain side and rear paneling. Also, the SST 4-door sedan and station wagon feature a full body side wood-grain trim strip.

The new series lineup features this wagon.

Ambassador Series:

4-Door Sedan	6985-2

Ambassador DPL Series:

4-Door Sedan	6985-5
4-Door Station Wagon	6988-5
2-Door Hardtop	6989-5

Ambassador SST Series:

4-Door Sedan	6985-7
4-Door Station Wagon	6988-7
2-Door Hardtop	6989-7

The all-new front end sheet metal, grille, and bumper with new deck lid, tail lamps, and rear quarter panel end caps produce an entirely new appearance from all angles. This achieves the differences necessary to establish the Ambassador as an all-out entry into the "big-car" market. The entire line boasts a new, higher-capacity air-conditioning system as standard equipment. The delete option on air conditioning is still available. However, if air conditioning is deleted, the "Command Air" ventilation system is automatically substituted. This system utilizes all the air-conditioning outlets with a high-capacity, three-speed blower motor. The high-line identity is reinforced by the new custom velour interior trim options in the SST 4-door sedan and by the new wood-grain SST wagon. All Ambassador (and Rebel) wagons feature the new Dual-Swing tailgate as standard equipment. Also, all Ambassador two-seat wagons incorporate a new, larger underfloor storage compartment.

The "big-car" identity is further established through the new standard engine for the Ambassador and Ambassador DPL, the Torque-Command 232 CID, 155 HP engine with two-barrel carburetor. The SST maintains the Typhoon V-8 290 CID, 200 HP engine. However, this series now becomes standard with automatic transmission.

The instrument panels are all new and incorporate a new passenger side air-conditioner air outlet. The all-new trim styles include new color-keyed Avocado and Yellow interiors. All the new door trim panels provide a more luxurious appearance through the use of new, deeper dielectric patterns.

All the 1968 SAFE-COMMAND safety features are carried into 1969. Further new features are added to continue American Motors' traditional policy of vehicle safety.

A detailed description of the new Ambassador for 1969 follows:

1969
AMBASSADOR
New Exterior
Styling Features

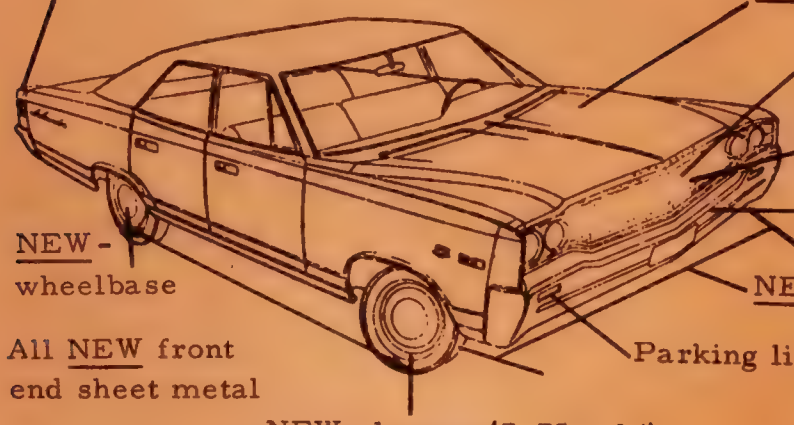

NEW - rear marker lights

NEW - sculptured hood

Ambassador nameplate in script located in grille

NEW - grille with stainless steel overlay and dual horizontal headlights

NEW - front bumper

NEW - wheelbase

NEW - wide track

All NEW front end sheet metal

Parking lights on with head lamps

NEW - larger (7.75 x 14) tires standard with six cylinder engine

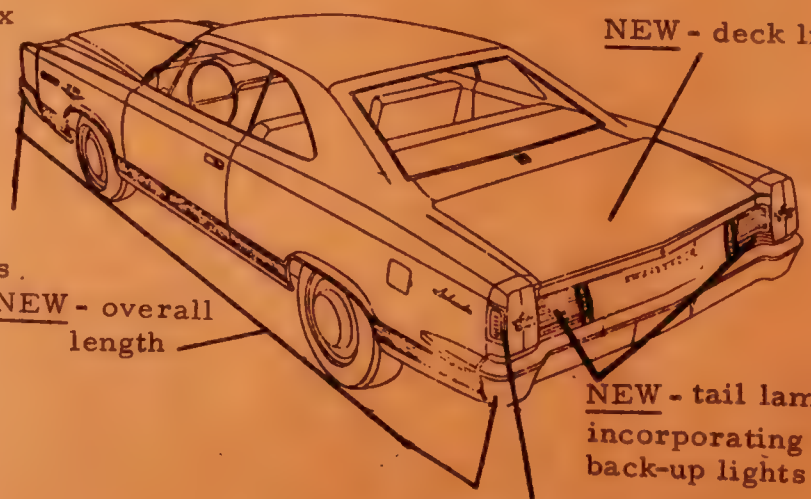

NEW - deck lid

Note: NEW - exterior ornamentation is covered under series differentials.

NEW - overall length

NEW - tail lamps incorporating back-up lights

NEW - rear quarter end caps incorporating Ambassador emblem

NEW - 122" Wheelbase and 206.5" Overall Length (207"-Wagon)

1969 AMBASSADOR
New Exterior Styling Features

NEW - Front End Sheet Metal
- NEW - sculptured hood
- NEW - front fenders
- NEW - injection-molded plastic (ABS) grille with stainless steel overlay and horizontal headlights

NEW - Rear Sheet Metal
- NEW - deck lid
- NEW - rear quarter end caps incorporating Ambassador emblem
- NEW - tail lamps incorporating back-up lights
- NEW - rear side marker lights

NEW - Dual-Swing Tailgate standard on all station wagons

NEW - SST Station Wagon with standard wood-grain side and rear paneling

NEW - 12 Exterior Colors (plus two carryover colors - Matador Red and Frost White) for DPL & SST. 9 NEW, plus 2 carryover for base series.

NEW - paint treatment on wheel covers and hub caps

1969 AMBASSADOR
New Interior Styling Features

NEW - Instrument Panel:

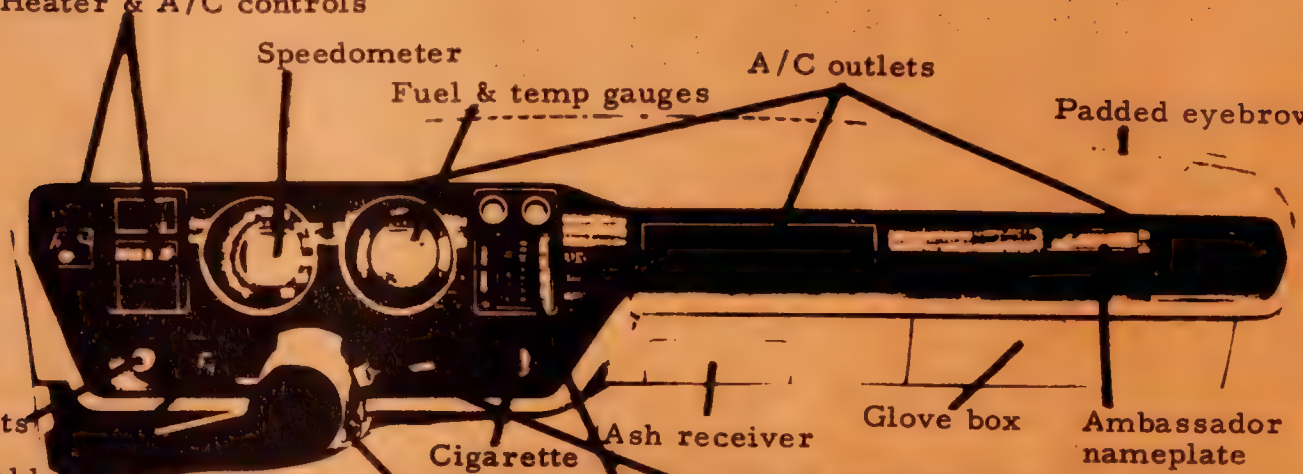

NEW - seat trim styles, colors and fabrics
NEW - door trim panel patterns with new deeper padded appearance
NEW - instrument panel with padded eyebrow
NEW - air-conditioning outlets (new outlet on passenger side)
NEW - optional custom velour seat trim on SST 4-door sedan
NEW - 100% nylon cut pile carpet.

1969 AMBASSADOR
New Chassis And Mechanical Features

NEW - wheelbase - 122.0" and overall length - 206.5" (207.0-wagons). Provides better weight balance under loaded conditions. This along with other factors of increased length and weight will provide a quieter and smoother ride.

NEW - wider track - 60.0" front and rear. Provides better stability and a wider stance.

NEW - high-capacity air-conditioning system - faster initial cooling to lower interior temperatures with more air movement capacity

¢ NEW - "Guard-Glo", the safer head lamp with a reserve filament that continues to glow when main filaments burn out. A safety feature that helps eliminate the "one-eyed" menace

NEW - "Clear-Power 24" battery with transparent, light-weight polypropylene case

NEW - standard six-cylinder engine - 232 CID, 155 HP, 2-barrel torque-command six on Ambassador (base) and DPL V-8 remains standard on SST

NEW - suspended accelerator pedal

NEW - steering linkage geometry for improved handling

NEW - rear suspension geometry for more stablized ride and reduced vibration

NEW - front motor mounts of butyl rubber for reduced vibration

NEW - 6" rim width wheels become standard on station wagons only

NEW - longer upper control arm bushings for softer and quieter ride

NEW - 55-amp alternator standard with "All-Season" air conditioning

Chassis And Mechanical Changes

The secondary (outer) door seals are removed on all 4-door models

New Optional Equipment

NEW - Custom Velour Seat Trim available in Blue or Platinum - SST 4-door sedan only. Includes full body side, stainless steel trim insert in place of standard wood-grain insert

NEW - F78 x 14 Wide Aspect, Fiberglass-Belted ("Polyglas") White Wall Tires (standard white wall tires remain optional)

NEW - 14" wheel with 6" rims (standard on wagons) available on all V-8's

Optional Equipment Changes

Delete option on air-conditioning is still available. However, now if it is exercised, "Command Air" ventilation is automatically substituted. This system uses all the A/C outlets and duct assemblies and a high-capacity, three-speed blower motor.

Tachometer dropped

4-Speed manual floor-mounted transmission no longer available

Overdrive transmission no longer available

All V-8 engines available with automatic transmissions only

Wood-grain side paneling no longer optional on DPL - Replaced by SST station wagon which features wood-grain side and rear paneling as standard

Exterior Pin Stripe - Now available on all models

Three-speed electric windshield wipers (was variable speed)

Revision 6/24/68

1969 AMBASSADOR
Model Availability

Body Styles	Ambassador (Base)	Ambassador DPL	Ambassador SST	Total
4-Door Sedans	6985-2	6985-5	6985-7	3
2-Door Hardtops	- - -	6989-5	6989-7	2
4-Door Station Wagons	- - -	6988-5	6988-7	2
Total	1	3	3	7

1968 Models Discontinued - Ambassador (Base) Hardtop

1969 Models Added - SST 4-Door Station Wagon, 6988-7, features wood grain side and rear paneling standard

New Safety Features

Redesigned adjustable headrests
Increased depth of new instrument panel crash pad eyebrow to eliminate reflections
Relocation of ignition switch to reduce knee impact hazard
Redesigned radio push buttons for larger corner radii to reduce head impact hazard
Air-conditioning outlets protected by crash pad eyebrow

1969 AMBASSADOR

"SAFE-COMMAND" Safety Features
(Standard unless otherwise noted)

Construction

Energy absorbing front-end structural design
High-strength thick laminate windshield
Tempered safety glass, side and rear windows
Extra-strength door hinges
Molded ceilings
Padded instrument panel
Break-away front ash receivers
Recessed rear ash receiver
Padded sun visors
Non-glare finish on interior and exterior parts

Controls and Instruments

Energy-absorbing steering column
Deep-dish impact absorbing steering wheel
Safety-shaped instrument control knobs
Safety-automatic transmission shift pattern
Safety-styled instrument panel layout

Brakes and Wheels

Double-safety brake system with self-adjusting feature
Brake system warning light
Mechanical stoplight switch
Corrosion-resistant brake lines and fittings
Safety-rim wheels
Tread-wear indicators molded in tire tread

Seating and Seat Belts

Seat belts for all seating positions:
  a. Standard for all seating positions
  b. Two front seat belts retractable
Two front shoulder belts
Rear shoulder-belt anchors installed
Safety-seat and shoulder-belt anchorages
Safety-seat anchorages
Automatic lock with manual release folding front seats on 2-door models
Folding rear-seat-back latches for wagons
Front seat headrests
Padded front seat back

1969 AMBASSADOR

"SAFE-COMMAND" Safety Features

Locks and Door Handles

High-strength door locks
"Pre-Set-Impulse" front door locking system
Safety-shaped interior door handles
Flush-contoured outside door handles
Two-key locking system

Accessories and Equipment

4-way hazard warning signals
Lane-changer feature for turn signals
Safety vanity mirror (opt.)
Automatic back-up lights
Shift-command for automatic or manual operation on automatic transmission (opt.
Day/Night inside rearview mirror with twin pivots and protected edges
Rearview mirror, exterior, left side
Windshield washers - manual (electric opt.)
Non-glare windshield wipers
Vacuum power booster windshield wiper motors (electrical opt.)
Defrosters and defoggers
Side-of-Car safety markers, front and rear
¢ "Guard-Glo" head lamps
¢ Parking lights illuminated with headlights

1969 AMBASSADOR

Series Features

AMBASSADOR (Base):

Exterior:

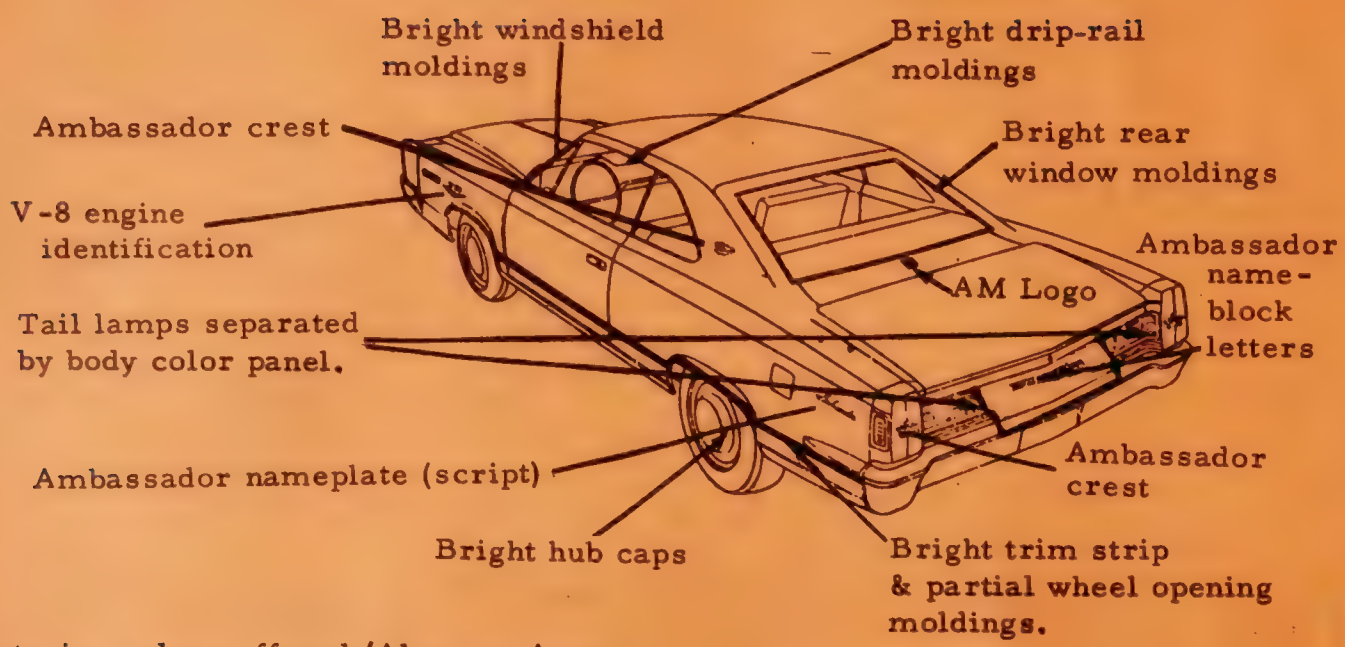

11 Exterior colors offered (Alamosa Aqua, Cordoba Dark Brown, Surf Green and Bittersweet Orange not offered.)

Interior:

Instrument Panel - Painted (color coordinated)

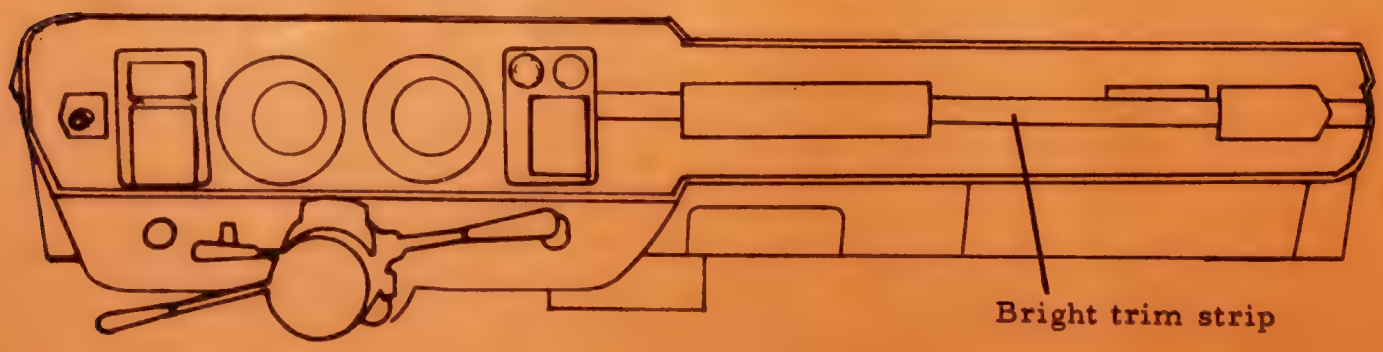

Air Conditioning standard
NEW - unique door trim panels and seat designs
NEW - "Carthage" pattern cloth seat trim
NEW - "Basket weave" pattern embossed vinyl seat trim (optional)

1969 AMBASSADOR

Ambassador Features

Exterior:

Bright drip-rail moldings
Bright windshield and rear window reveal moldings
Bright full-length lower body side moldings with partial wheel opening moldings
11 Exterior paint colors (9 NEW)
Ambassador crests of rear quarter end caps (except station wagon) and on "C" pillars
Ambassador name in block letters across front of hood and across lower deck opening panel between tail lamps
Ambassador script on both rear quarter panels
Paint stripe on upper body side available optionally

Interior:

232-2V, 155 HP six-cylinder engine standard
Air conditioning standard
Custom steering wheel standard
Front and rear armrests standard
Cut pile carpet
Unique door trim panels with bright molding and Ambassador nameplate
Unique seat trim patterns
Cigarette lighter and glove box lock standard
Front door dome or "C" pillar light switches standard

1969 AMBASSADOR

Series Features

AMBASSADOR DPL: Same as Ambassador (base) except as noted below.

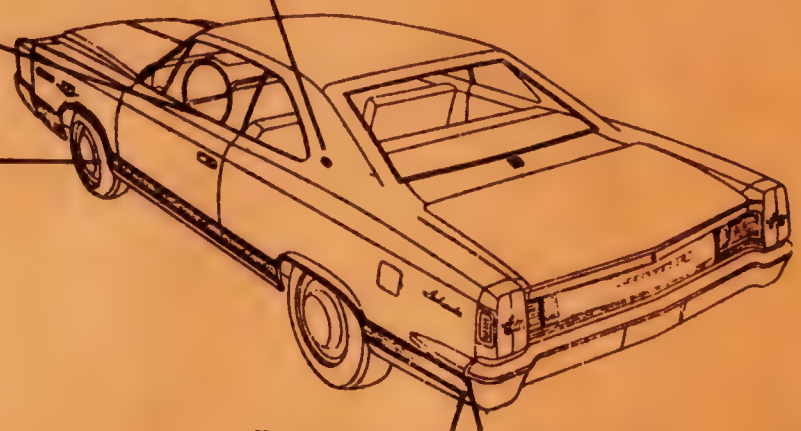

14 Exterior colors offered
(Surf Green not offered)

Interior:

Instrument Panel

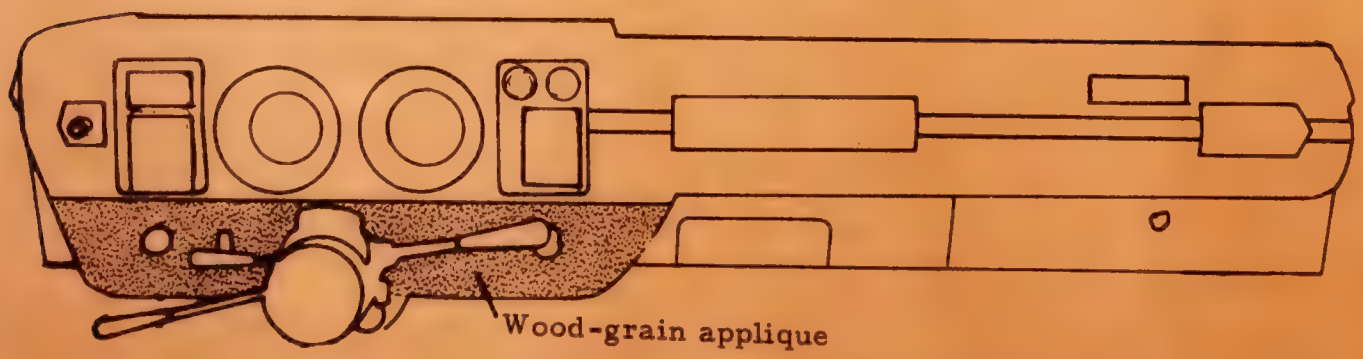

NEW - unique door trim panels with wood-grain applique and seat designs
NEW - Unique seat trim designs
NEW - "Trafalgar" pattern cloth seat trim
Optional Vinyl/seat trim-"Ventilair" (breathable) - standard on wagons

1969 AMBASSADOR

Series Differentials

Ambassador DPL Over Ambassador

Exterior:

Double lower-body side bright trim strips separated by body color
Bright lower-window opening moldings
Wheel discs standard
DPL letters on "C" pillar
Three extra exterior colors available (Alamosa Aqua, Cordoba Brown and Bittersweet Orange)

Interior:

Unique door trim panels with wood-grain applique and DPL nameplate
Instrument panel wood-grain applique in light switch, cigarette lighter, etc., control area
Bright pedal moldings
Unique seat trim patterns and materials

1969 AMBASSADOR
SERIES FEATURES

AMBASSADOR SST: Same as Ambassador DPL except as noted below.

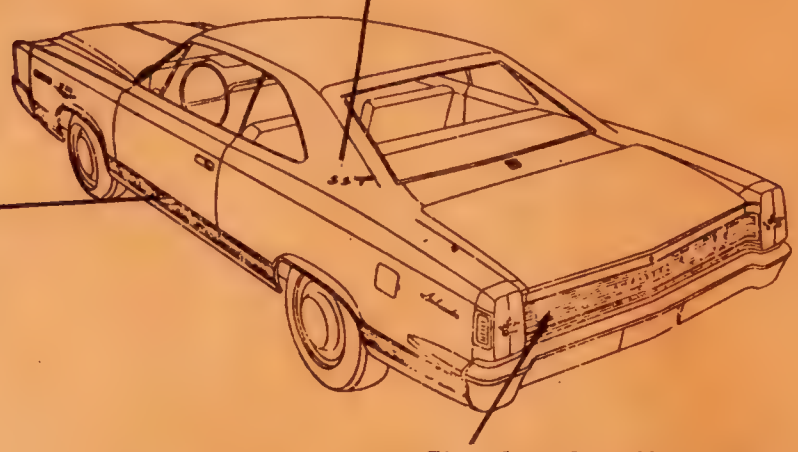

Interior:

Instrument Panel

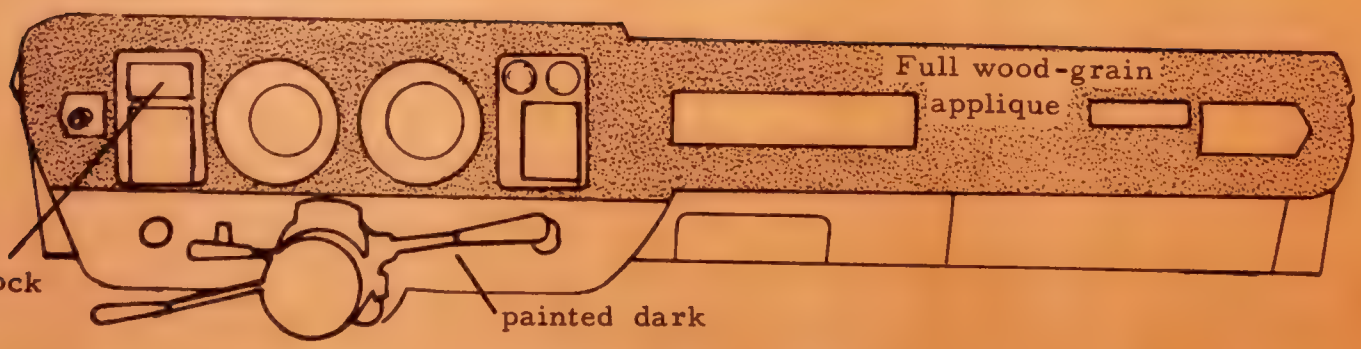

NEW - unique door trim panels with wood-grain applique
NEW - seat trim designs
NEW - custom velour seat trim offered optionally on 4-door sedan ("Custom" nameplate on front door trim panel)
NEW - "Aragon" pattern cloth seat trim
Optional vinyl seat trim-"Ventilair" (breathable) - standard on wagons

1969 AMBASSADOR

Series Differentials

Ambassador SST Over Ambassador DPL

Exterior:

Double lower-body side, bright trim strips separated by a NEW wood-grain trim panel
Simulated wall-to-wall tail lamps (except wagon)
SST letters on "C" pillar

Interior:

290-2V, 200 HP engine standard
Full-width instrument panel wood-grain applique
Unique door trim panel with wood-grain applique and SST nameplate
Glove-box light, parking brake warning light, rear door dome or "C" pillar light switch, clock standard, trunk light, ash receiver light, and lights-on warning buzzer
Individual reclining seats standard
Bucket seats available optionally on hardtop
NEW - "Custom" velour seat trim available optionally on 4-door sedan
With "Custom" trim, stainless steel trim strip replaces wood-grain exterior trim strip
Unique seat trim patterns and cloth materials ("Ventilair" vinyl is common with DPL)

1969 AMBASSADOR

Series Features

Ambassador Wagons:

DPL:

NEW - Dual-Swing tailgate standard
NEW - larger underfloor storage area on two-seat wagons (8.0 cubic, was 3.5 cubic feet)
NEW - 6" rim width wheel standard (8.25 x 14 tires retained as standard)

Bright tailgate trim panel "Ventilair" vinyl is standard seat trim

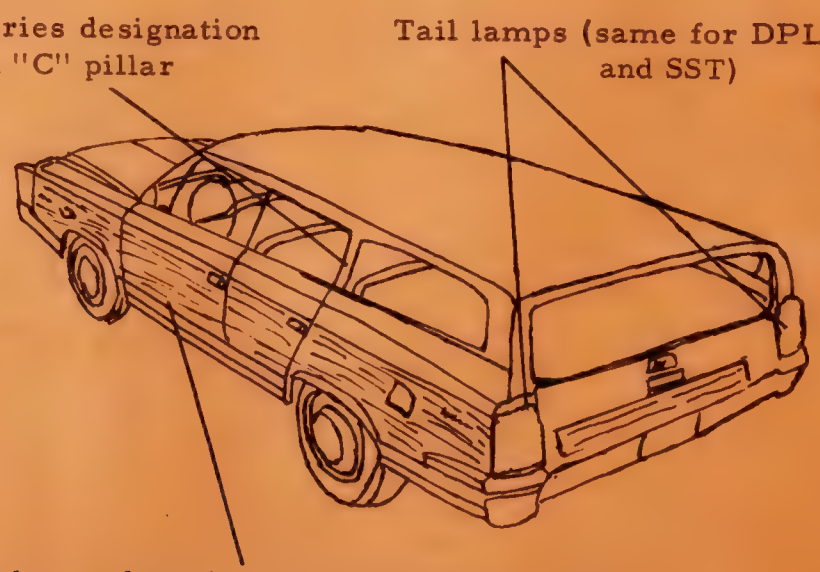

SST: Same as DPL except as follows:
Same exterior and interior trim level as SST 4-door sedan and SST hardtop except that wood-grain side and rear paneling (as shown) replaces bright trim below beltline

1969 AMBASSADOR
Ambassador Wagon Features

Ambassador DPL:

NEW - Dual-Swing tailgate
NEW - bigger, lockable underfloor storage areas
NEW - 6" rim width wheel standard (8.25 x 14 tires retained as standard)
Luggage rack continues as standard
Crank-operated tailgate window (electric optional)
Carpeted cargo area
Spare tire now mounted vertically in all wagons
Third-seat option
Wood-grain side paneling is no longer available optionally
"Ventilair" breathable vinyl seat trim (cloth trimmed individually reclining seats available optionally)

Series Differential:
Ambassador SST over DPL:

All standard differential items of SST series over DPL series
Wood-grain side and tailgate paneling standard
Cloth seat trim available as a no cost option
Rub strips for cargo floor

1969 AMBASSADOR
Retained Standard Features

Body:

All-welded, Single-Unit body construction (safe, strong, durable) ("Advanced Unit Construction")
Deep-Dip body rustproofing
All-Season air conditioning
Weather-Eye heater
Fresh-air ventilation
Air-intake guard screen
Triple-coated Lustre-Gard acrylic enamel (14 colors)
Molded cushioned acoustical ceiling
Curved side glass
Injection-molded (ABS) grille
Two-position front door checks
Front and rear armrests
Cigarette lighter
Front ash receivers
Rear ash receivers
Full-width carpeting
Coil-spring seat construction (solid foam for wagon third seat)
Front seat foam cushion (rear seat foam cushion in SST hardtop)
Extruded aluminum door window frames on all 4-door models
Neoprene door seals on all hardtops
Dome or side pillar lights
Station wagon roof-top travel rack
Glove-box lock
Hidden compartment with lock for station wagons
Two coat hooks

Revised 6-24-68

1969 AMBASSADOR
Retained Standard Features

Mechanical:

Coil springs at all four wheels
Direct-action, independent front suspension with sway bar
Four-link, trailing arm rear suspension
Hypoid-gear rear axle
Self-adjusting brakes with bonded linings
Brake diameter 10"; lining area 167.5 square inches
Standard 4-ply-rating, 2-ply tires; 7.75 x 14 for V-8's, 8.25 x 14 for all wagons. NEW - 7.75 x 14 for sixes, was 7.35 x 14
Engine-oil filter, full flow
Fuel-tank approximate capacity, 21.5 gallons (19 for wagons)
Fuel filters in tank and at carburetor (NEW - in line filter just ahead of carburetor-was in fuel pump).
All-Season engine coolant
Anti-smog positive crankcase vent
"Engine-Mod" exhaust emission control system
Automatic choke
Wheel discs standard on DPL and SST

Electrical:

Dual horns
Standard 35-amp electronic alternator and sealed transistorized voltage
regulator (NEW - 55-amp with air conditioning)
NEW - "Clear-Power 24" Intercell battery (was Power-Guard); 50-amp standard on Sixes and "290" V-8's, 60-amp standard on "343" and "390", 70-amp optional
Dual head lamps

1969 AMBASSADOR

Engine, Transmission, and Rear Axle Availability

Engine	Transmission	Rear Axle Ratios + @	
		Std.	Opt.***
155 HP Torque-Command 232 CID Six Standard on all Except SST	3-Speed Manual; Column (std.) Shift-Command; Column (opt.)	3.15:1 3.15:1	--- ---
200 HP Typhoon V-8 290 CID Standard on SST Optional on all Others	Shift-Command; Column (opt.) Shift-Command; Console* (opt.)	2.87:1 2.87:1	3.15:1 3.15:1
235 HP Typhoon V-8 343 CID Optional on all	Shift-Command; Column (opt.)	2.87:1	3.15:1
280 HP Typhoon V-8 343 CID Optional on all	Shift-Command; Column (opt.) Shift-Command; Console* (opt.)	2.87:1 2.87:1	3.15:1 3.15:1
315 HP AMX V-8 390 CID ** Optional on SST Only	Shift-Command; Column (opt.) Shift-Command; Console* (opt.)	2.87:1 2.87:1	3.15:1 3.15:1

*Available only on SST hardtop with bucket seats
**Dual exhaust standard (available optionally on 280 HP 343 CID engine)
***Available at no extra cost
@+ Also 3.73:1, 3.91:1, 4.10:1, 4.44:1, and 5.00:1 available as extra cost
DEALER-INSTALLED options for V-8

Revised 6-24-68
¢ Revised 8-12-68

1969 AMBASSADOR

Tire Availability

	AMBASSADOR SIX		AMBASSADOR V 8	
	Sedans Hardtops	Station Wagons	Sedans Hardtops	Station Wagons
7.75 x 14, 4-Ply Rated 2-Ply Rayon (or Vytacord) Black	STD	NA	STD	NA
7.75 x 14, 4-Ply Rated 2-Ply Rayon (or Vytacord) White	OPT	NA	OPT	NA
7.75 x 14, 8-Ply Rated 4-Ply Rayon (or Vytacord) Black & White	OPT	NA	OPT	NA
8.25 x 14, 4-Ply Rated 2-Ply Rayon (or Vytacord) Black ¢ (With 6" Rim Width Wheels)	OPT	STD	OPT	STD
8.25 x 14, 4-Ply Rated 2-Ply Rayon (or Vytacord) White ¢ (With 6" Rim Width Wheels)	OPT	OPT	OPT	OPT
8.25 x 14, 8-Ply Rated 4-Ply Rayon (or Vytacord) Black & White ¢ (With 6" Rim Width Wheels)	OPT	OPT	OPT	OPT
F78 x 14, 4-Ply Rated 2-Ply Fiberglass-Belted "Polyglas" (Wide Aspect, Extra Performance White Wall) #	OPT #	NA	OPT #	NA

1969 AMBASSADOR
Factory-Installed Options

Symbols:
- E - Extra Cost
- NA - Not Available
- STD - Standard
- D - Delete Option

	Code	Base	DPL	SST
Paint and Upholstery:				
Two-Tone Paint	-1-	E	E	E
Special Application of AM Colors (covers two-tone combinations not offered; paint colors not offered in a given line)	-	E	E	E
All Vinyl Seat Upholstery (standard on station wagons)		E	E	NA
All Vinyl Seat Upholstery for Individual Seats Only (standard on SST station wagon)		NA	NA	NA
Vinyl Covered Roof - Black, Off-White, Blue (Sedan & Hardtop)	BKV WHV BUV	NA	E	E
Engines:				
232 CID, 155 HP Torque Command Six (2-barrel carburetor)	155	STD	STD	NA
290 CID, 200 HP Typhoon V-8 (2-barrel carburetor)	200	E	E	STD
343 CID, 235 HP Typhoon V-8 (2-barrel carburetor)	235	E	E	E
343 CID, 280 HP Typhoon V-8 (4-barrel carburetor)	280	E	E	E
390 CID, 315 HP AMX V-8 (4-barrel carburetor)	315	NA	NA	E
Dual Exhaust for 343 CID, 280 HP engine (standard on 390 CID engine)	DE	E	E	E
Performance Items:				
Twin-Grip Differential	TGD	E	E	E
Transmissions:				
Shift Command, Column Shift 6-Cylinder	A	E	E	NA
290 CID V-8		E	E	E
343 CID V-8		E	E	E
390 CID V-8		# NA	# NA	E
Shift Command, Floor Shift with Console (with V-8 & bucket seats only; not available with 343 CID, 235 HP engine)	C	NA	NA	E

Revision 6/24/68

1969 AMBASSADOR

FACTORY-INSTALLED OPTIONS (cont.)

	Code	Base	DPL	SST
Power Assists:				
Power Steering (recommended with air conditioning)	PS	E	E	E
Power Brakes	PB	E	E	E
Power Disc Brakes (V-8 only)	PD	E	E	E
Power Lift Windows				
Side Windows	PW4	NA	E	E
Tailgate Only	PW1	NA	E	E
Side Windows and Tailgate	PW5	NA	E	E
Cruise-Command Automatic speed control system (V-8 only)	ASC	E	E	E
# **Seating Items:**				
Individually Adjustable Reclining Seats	1S	E	E	STD
Reclining Bucket Seats (hardtop only) *	SB	NA	NA	E
Reclining Bucket Seats with Front Armrest and Center Cushion (hardtop only)	SBA	NA	NA	E
Third Seat, Station Wagon (includes power rear window and two seat belts)	TS	NA	E	E
Radios and Tape Equipment:				
AM Push Button Radio	RP	E	E	E
AM-FM Push Button Radio	RFM	E	E	E
Stereo 8 Tape Player with two rear mounted speakers (4 door Sedans and Hardtops only)	STD	E	E	E
Duo-Coustic Rear Speaker (available with radio only on sedans and hardtops)	DCS	E	E	E
Appearance Items:				
Exterior Paint Stripe (NA SST S/W)	EPS	E	E	E
Sports Steering Wheel	SSW	E	E	E
Wheel Discs	WD	E	STD	STD
Turbo-Cast Wheel Covers	TC	E	E	E
Wire Wheel Covers	WC	E	E	E
Bumper Guards - Front and Rear (not available on wagons)	BG4	E	E	E
Bumper Guards - Front only (wagons only)	BG2	NA	E	E
Wood-Grain Paneling, Side and Rear - wagons only (not available with two-tone paint)	WO	NA	NA	STD

* Available with console shift only

Revised 6-24-68
¢ Revised 8-12-68

1969 AMBASSADOR

FACTORY-INSTALLED OPTIONS (cont.)

	Code	Base	DPL	SST
Heating and Air Conditioning:				
# All-Season Air Conditioning (includes heavy duty engine cooling system and 55-amp alternator)	AC	STD	STD	STD
All-Season Air Conditioning System Deletion ("Command Air" ventilation is substituted)	CA	D	D	D
Solex Glass - Windshield only	SG	E	E	E
Solex Glass - All Windows (recommended with air conditioning)	SW	E	E	E
Convenience Groups and Items:				
Visibility Group - includes remote control left outside mirror, visor-vanity mirror, electric three-speed windshield wipers and electric washers	VG	NA	NA	E
Visibility Group - includes remote control left outside mirror, clock, visor vanity mirror, electric three-speed windshield wipers and electric washers	VG	E	E	NA
¢ Light Group - Includes trunk or cargo light, two courtesy lights, glove-box light, ash receiver light, parking brake warning light, lights-on warning buzzer and rear door dome light switches	LG	E	E	STD
Adjust-O-Tilt Steering Wheel (not available with manual column shift)	ASW	E	E	E
¢ **Heavy-Duty Equipment:**				
Handling Package, 6-Cylinder Sedans and Hard-tops - includes front sway bar, heavy-duty springs and shocks	HP	E	E	NA
Handling Package, 6-Cylinder Wagons and all V-8's - includes heavy-duty springs and shocks	HP	E	E	E
Heavy-Duty Cooling System - includes heavy-duty radiator, power-flex fan and fan shroud	HDC	STD	STD	STD
Heavy-Duty 70-amp Battery	HB	E	E	E
# Heavy-Duty 70-amp Battery and 55-amp Alternator (for car less air conditioning)	4A7	E	E	E
Heavy-Duty Clutch with 3-Speed Transmission, 6-Cylinder Only	HC	E	E	NA
Engine Block Heater	BH	E	E	E
Automatic Transmission Oil Cooler (standard with V-8)	ATC	E	E	STD

1969 AMBASSADOR

FACTORY-INSTALLED OPTIONS (cont.)

	Code	Base	DPL	SST
Miscellaneous:				
Insulation Group - includes undercoating and hood insulation	ING	E	E	NA
Undercoating	UN	NA	NA	E

1969 AMBASSADOR

Dealer-Installed Accessories

Cruise Command Kit (V-8 with automatic transmisssion only)
Tissue Dispenser
Compass - Illuminated
Litter Basket and Tissue Dispenser
Window Ventshades (except Hardtops)
Window Screens; Pairs - Front and Rear Door (except Hardtops)
Tailgate Window Screen - Station Wagons
Child's Safety Vest
Rear Door Child Safety Locks
Spotlight
License Plate Frames
Spare Tire Covers
Gas Door Guard
Rubber and Vinyl Floor Mats (Pairs - Door-to-Door Front and Rear)
Air-Lift Air Springs
Load Levelers
Fuel Filter Mileage Minder - Extra Fuel Filtration
Luggage Straps - Pair
Luggage Carrier - Vinyl - All Station Wagons
Luggage Carrier - Vinyl - All Sedans (two sizes)
¢ Ski Carrier - Top Mounted
Rear Deck Luggage Rack
Stereo Tape Players
AM Radios
FM/AM Radios
Rear Seat Speakers (Except Station Wagons)
Locking Gas Caps
Door Edge Guards (2 and 4 piece sets)
Visor-Vanity Mirror
Remote-Control Mirrors
Right Hand Rearview Mirror
Engine Block Heaters - Six and V-8
Bumper Guards
Wheel Covers
Wire-Wheel Covers
Turbo-Cast Wheel Covers
Air-Conditioning Kits
Courtesy and Glove-Box Light Kits
Parking Brake and Headlight Warning Buzzer Kits
Power Brake Kits
Rear Window Defogger Kit (Sedans and Hardtops)
Rear Shoulder Belt Kits
Trunk-Light Kit
¢ Fuse Kit
¢ Protective Trim Moldings

¢ Revised 8-12-68

1969 AMBASSADOR

¢ DEALER-INSTALLED ACCESSORIES (cont.)

Clock Kit
Dual Exhaust

1969 AMBASSADOR

SEAT, TRIM AND COLOR AVAILABILITY

MODELS	SEAT TYPES AVAILABLE	TRIM TYPE	CLOTH (STD.) "CARTHAGE"			VINYL (OPT.) "BASKETWEAVE"			
		TRIM COLORS	BLUE	BROWN	AVOCADO	CHARCOAL	BLUE	BEIGE	AVOCADO
		"T" CODES	983	986	987	981	983	986	987
4 DOOR SEDAN	BENCH CUSHION—NON-RECLINING BACK (STD.) †		A	A	A	B			
	INDIVIDUAL CUSHION—INDIVIDUAL RECLINING BACK (OPT.)		C	C	C	D	D	D	D

	EXTERIOR COLORS	BODY COLORS	WHEEL COLORS	OPT. STRIPE							
11 SOLID COLORS—STANDARD	MATADOR RED	39	39	WHITE		●		●		●	
	ASCOT GRAY, *(Light)*	62	80	BLACK	●			●	●		
	CASTILLIAN GRAY, Metallic *(Medium)*	63	80	BLACK	●			●	●		
	BEALE ST. BLUE, Metallic *(Medium)*	64	65	WHITE	●			●	●		
	REGATTA BLUE, Metallic *(Dark)*	65	65	WHITE	●			●	●		
	HUNTER GREEN, Metallic *(Dark)*	71	71	WHITE		●	●	●		●	●
	FROST WHITE	72	80	BLACK	●	●	●	●	●	●	●
	WILLOW GREEN, Metallic *(Medium)*	75	75	BLACK		●	●	●		●	●
	POMPEII YELLOW	76	75	BLACK			●	●			●
	BUTTERNUT BEIGE, Metallic *(Medium)*	77	78	BLACK		●		●		●	
	BLACK MINK, Metallic	80	80	WHITE	●	●	●	●	●	●	●
8 TWO-TONE REVERSIBLE EXTRA COST OPTION	ASCOT GRAY, *(Light)* / CASTILLIAN GRAY, Metallic *(Medium)*	62 / 63	80	BLACK	●			●	●		
	BEALE ST. BLUE, Metallic *(Medium)* / REGATTA BLUE, Metallic *(Dark)*	64 / 65	65	WHITE	●			●	●		
	WILLOW GREEN, Metallic *(Medium)* / POMPEII YELLOW	75 / 76	75	BLACK			●	●			●
	BLACK MINK, Metallic / FROST WHITE	80 / 72	80	WHITE BLACK	●	●	●	●	●	●	●
16 TWO-TONE NON-REVERSIBLE EXTRA COST OPTION	MATADOR RED / ASCOT GRAY, *(Light)*	39 / 62	39	WHITE		●		●		●	
	MATADOR RED / BLACK MINK, Metallic	39 / 80	39	WHITE		●		●		●	
	ASCOT GRAY, *(Light)* / BLACK MINK, Metallic	62 / 80	80	BLACK	●			●	●		
	CASTILLIAN GRAY, Metallic *(Medium)* / FROST WHITE	63 / 72	80	BLACK	●			●	●		
	CASTILLIAN GRAY, Metallic *(Medium)* / BLACK MINK, Metallic	63 / 80	80	BLACK	●			●	●		
	BEALE ST. BLUE, Metallic *(Medium)* / FROST WHITE	64 / 72	65	WHITE	●			●	●		
	BEALE ST. BLUE, Metallic *(Medium)* / BLACK MINK, Metallic	64 / 80	65	WHITE	●			●	●		
	REGATTA BLUE, Metallic *(Dark)* / ASCOT GRAY, *(Light)*	65 / 62	65	WHITE	●			●	●		
	REGATTA BLUE, Metallic *(Dark)* / BLACK MINK, Metallic	65 / 80	65	WHITE	●			●	●		
	HUNTER GREEN, Metallic *(Dark)* / BLACK MINK, Metallic	71 / 80	71	WHITE		●	●	●		●	●
	WILLOW GREEN, Metallic *(Medium)* / FROST WHITE	75 / 72	75	BLACK		●	●	●		●	●
	WILLOW GREEN, Metallic *(Medium)* / BLACK MINK, Metallic	75 / 80	75	BLACK		●	●	●		●	●
	POMPEII YELLOW / FROST WHITE	76 / 72	75	BLACK			●	●			●
	POMPEII YELLOW / BLACK MINK, Metallic	76 / 80	75	BLACK			●	●			●
	BUTTERNUT BEIGE, Metallic *(Medium)* / FROST WHITE	77 / 72	78	BLACK		●		●		●	
	BUTTERNUT BEIGE, Metallic *(Medium)* / BLACK MINK, Metallic	77 / 80	78	BLACK		●		●		●	

† Letter codes identify fabric with seat type.

1969 AMBASSADOR DPL

SEAT, TRIM AND COLOR AVAILABILITY

MODELS	SEAT TYPES AVAILABLE	"T" CODES	CLOTH (STD.) "TRAFALGAR" CHARCOAL	CLOTH BLUE	CLOTH BROWN	CLOTH AVOCADO	VINYL (OPT.) (STD. ON WAGON) "VENTILAIR" CHARCOAL	VINYL BLUE	VINYL RED	VINYL BEIGE	VINYL AVOCADO
4 DOOR SEDAN	BENCH CUSHION—NON-RECLINING BACK (STD.)	†	A	A	A	A					
	INDIVIDUAL CUSHION—INDIVIDUAL RECLINING BACK (OPT.)		C	C	C	C	D	D		D	D
4 DOOR ST. WAG.	BENCH CUSHION—NON-RECLINING BACK (STD.)						B	B		B	B
	INDIVIDUAL CUSHION—INDIVIDUAL RECLINING BACK (OPT.)		C	C	C	C	D	D		D	D
2 DOOR HARDTOP	BENCH CUSHION—NON-RECLINING BACK (STD.)		A	A	A	A	B	B	B	B	B
	INDIVIDUAL CUSHION—INDIVIDUAL RECLINING BACK (OPT.)		C	C	C	C	D	D	D	D	D

	EXTERIOR COLORS	BODY COLORS	OPT. STRIPE	CHARCOAL	BLUE	BROWN	AVOCADO	CHARCOAL	BLUE	RED	BEIGE	AVOCADO
14 SOLID COLORS—STANDARD	MATADOR RED	39	WHITE	●1				●1		●1		
	ASCOT GRAY, *(Light)*	62	BLACK	●1	●2			●1	●2	●1		
	CASTILLIAN GRAY, Metallic *(Medium)*	63	BLACK	●1	●2			●1	●2	●1		
	BEALE ST. BLUE, Metallic *(Medium)*	64	WHITE	●2	●2			●2	●2			
	REGATTA BLUE, Metallic *(Dark)*	65	WHITE	●2	●2			●2	●2			
	ALAMOSA AQUA, Metallic *(Medium)*	68	BLACK	●1				●1				
	HUNTER GREEN, Metallic *(Dark)*	71	WHITE	●1		●1	●1	●1			●1	●1
	FROST WHITE	72	BLACK	●1	●2	●1	●1	●1	●2	●1	●1	●1
	WILLOW GREEN, Metallic *(Medium)*	75	BLACK	●1		●1	●1	●1			●1	●1
	POMPEII YELLOW	76	BLACK	●1			●1	●1				●1
	BUTTERNUT BEIGE, Metallic *(Medium)*	77	BLACK	●1		●1		●1			●1	
	CORDOBA BROWN, Metallic *(Dark)*	78	WHITE	●1		●1		●1			●1	
	BITTERSWEET ORANGE, Metallic	79	BLACK	●1		●1		●1			●1	
	BLACK MINK, Metallic	80	WHITE	●1	●2	●1	●1	●1	●2	●1	●1	●1
10 TWO-TONE REVERSIBLE EXTRA COST OPTION	ASCOT GRAY, *(Light)* / CASTILLIAN GRAY, Metallic *(Medium)*	62 / 63	BLACK	●	●			●	●	●		
	BEALE ST. BLUE, Metallic *(Medium)* / REGATTA BLUE, Metallic *(Dark)*	64 / 65	WHITE	●	●			●	●			
	WILLOW GREEN, Metallic *(Medium)* / POMPEII YELLOW	75 / 76	BLACK	●			●	●				●
	BUTTERNUT BEIGE, Metallic *(Medium)*	77	BLACK	●		●		●			●	
	CORDOBA BROWN, Metallic *(Dark)*	78	WHITE									
	BLACK MINK, Metallic / FROST WHITE	80 / 72	WHITE/BLACK	●	●	●	●	●	●	●	●	●
23 TWO-TONE NON-REVERSIBLE EXTRA COST OPTION	MATADOR RED / ASCOT GRAY, *(Light)*	39 / 62	WHITE	●				●		●		
	MATADOR RED / BLACK MINK, Metallic	39 / 80	WHITE	●				●		●		
	ASCOT GRAY, *(Light)* / BLACK MINK, Metallic	62 / 80	BLACK	●	●			●	●	●		
	CASTILLIAN GRAY, Metallic *(Medium)* / FROST WHITE	63 / 72	BLACK	●	●			●	●	●		
	CASTILLIAN GRAY, Metallic *(Medium)* / BLACK MINK, Metallic	63 / 80	BLACK	●	●			●	●	●		
	BEALE ST. BLUE, Metallic *(Medium)* / FROST WHITE	64 / 72	WHITE	●	●			●	●			
	BEALE ST. BLUE, Metallic *(Medium)* / BLACK MINK, Metallic	64 / 80	WHITE	●	●			●	●			
	REGATTA BLUE, Metallic *(Dark)* / ASCOT GRAY, *(Light)*	65 / 62	WHITE	●	●			●	●			
	REGATTA BLUE, Metallic *(Dark)* / BLACK MINK, Metallic	65 / 80	WHITE	●	●			●	●			
	ALAMOSA AQUA, Metallic *(Medium)* / FROST WHITE	68 / 72	BLACK	●				●				
	ALAMOSA AQUA, Metallic *(Medium)* / BLACK MINK, Metallic	68 / 80	BLACK	●								
	HUNTER GREEN, Metallic *(Dark)* / BLACK MINK, Metallic	71 / 80	WHITE	●		●	●	●			●	●
	WILLOW GREEN, Metallic *(Medium)* / WHITE	75 / 72	BLACK	●		●	●	●			●	●
	WILLOW GREEN, Metallic *(Medium)* / BLACK MINK, Metallic	75 / 80	BLACK	●		●	●	●			●	●
	POMPEII YELLOW / FROST WHITE	76 / 72	BLACK	●			●	●				●
	POMPEII YELLOW / BLACK MINK, Metallic	76 / 80	BLACK	●			●	●				●
	BUTTERNUT BEIGE, Metallic *(Medium)* / FROST WHITE	77 / 72	BLACK	●		●		●			●	
	BUTTERNUT BEIGE, Metallic *(Medium)* / BLACK MINK, Metallic	77 / 80	BLACK	●		●		●			●	
	CORDOBA BROWN, Metallic *(Dark)* / ASCOT GRAY, *(Light)*	78 / 62	WHITE	●		●		●			●	
	CORDOBA BROWN, Metallic *(Dark)* / WHITE	78 / 72	WHITE	●		●		●			●	
	CORDOBA BROWN, Metallic *(Dark)* / BLACK MINK, Metallic	78 / 80	WHITE	●		●		●			●	
	BITTERSWEET ORANGE, Metallic / WHITE	79 / 72	BLACK	●		●		●			●	
	BITTERSWEET ORANGE, Metallic / BLACK MINK, Metallic	79 / 80	BLACK	●		●		●			●	

NOTE: DPL 2 Door Hardtop and 4 Door Sedan Vinyl covered roofs.
"Levant Grain" grain vinyl. 1 Black or White. 2 Blue, Black or White †Lettered codes identify fabric with seat type.

1969 85-7 AMBASSADOR SST

SEAT, TRIM AND COLOR AVAILABILITY

			TRIM TYPE	SST									SST CUST.	
				CLOTH (Std.) "ARAGON"				VINYL (Opt.) (Std. on Wagons) "VENTILAIR"					CLOTH (Opt.) "VEL-OUR"	
			TRIM COLORS	PLATINUM	BLUE	BROWN	AVOCADO	CHARCOAL	BLUE	RED	BEIGE	YELLOW	PLATINUM	BLUE
MODELS	SEAT TYPES AVAILABLE		"T" CODES	992	993	996	997	991	993	995	996	999	992	993
4 DOOR SEDAN	INDIVIDUAL CUSHION—INDIVIDUAL RECLINING BACK (Std.) †			M	M	M	M	N			N		V	V
4 DOOR ST. WAG.	INDIVIDUAL CUSHION—INDIVIDUAL RECLINING BACK (Std.)				M	M	M	N	N		N			
2 DOOR HARD-TOP	INDIVIDUAL CUSHION—INDIVIDUAL RECLINING BACK (Std.)			M	M	M	M	N	N	N	N	N		
	BUCKET SEAT—RECLINING BACK (Opt.)			E	E	E	E	F	F	F	F	F		
	EXTERIOR COLORS	BODY COLORS	OPT. STRIPE											
14 SOLID COLORS—STANDARD	MATADOR RED	39	White	●1				●1		●1			●1	
	ASCOT GRAY, *(Light)*	62	Black	●2	●2			●1	●2	●1			●2	●2
	CASTILLIAN GRAY, Metallic *(Medium)*	63	Black	●2	●2			●1	●2	●1			●2	●2
	BEALE ST. BLUE, Metallic *(Medium)*	64	White	●2	●2			●2	●2				●2	●2
	REGATTA BLUE, Metallic *(Dark)*	65	White	●2	●2			●2	●2				●2	●2
	ALAMOSA AQUA, Metallic *(Medium)*	68	Black	●1				●1					●1	
	HUNTER GREEN, Metallic *(Dark)*	71	White	●1		●1	●1	●1			●1	●1	●1	
	FROST WHITE	72	Black	●2	●2	●1	●1	●1	●2	●1	●1	●1	●2	●2
	WILLOW GREEN, Metallic *(Medium)*	75	Black	●1		●1	●1	●1			●1	●1	●1	
	POMPEII YELLOW	76	Black	●1			●1	●1				●1	●1	
	BUTTERNUT BEIGE, Metallic *(Medium)*	77	Black	●1		●1		●1			●1		●1	
	CORDOBA BROWN, Metallic *(Dark)*	78	White	●1		●1		●1			●1		●1	
	BITTERSWEET ORANGE, Metallic	79	Black	●1		●1		●1			●1		●1	
	BLACK MINK, Metallic	80	White	●2	●2	●1	●1	●1	●2	●1	●1	●1	●2	●
10 TWO-TONE REVERSIBLE EXTRA COST OPTION	ASCOT GRAY, *(Light)* / CASTILLIAN GRAY, Metallic *(Medium)*	62 / 63	Black	●	●			●	●	●			●	●
	BEALE ST. BLUE, Metallic *(Medium)* / REGATTA BLUE, Metallic *(Dark)*	64 / 65	White	●	●			●	●				●	●
	WILLOW GREEN, Metallic *(Medium)* / POMPEII YELLOW	75 / 76	Black	●			●	●				●	●	
	BUTTERNUT BEIGE, Metallic *(Medium)* / CORDOBA BROWN, Metallic *(Dark)*	77 / 78	Wht. or Blk.	●		●		●			●		●	
	BLACK MINK, Metallic/FROST WHITE	80 / 72	Wht. or Blk.	●	●	●	●	●	●	●	●	●	●	●
23 TWO-TONE NON-REVERSIBLE EXTRA COST OPTION	MATADOR RED/ASCOT GRAY, *(Light)*	39 / 62	White	●				●		●			●	
	MATADOR RED/BLACK MINK, Metallic	39 / 80	White	●				●		●			●	
	ASCOT GRAY, *(Light)*/BLACK MINK, Metallic	62 / 80	Black	●	●			●	●	●			●	●
	CASTILLIAN GRAY, Metallic *(Medium)* / FROST WHITE	63 / 72	Black	●	●			●	●	●			●	●
	CASTILLIAN GRAY, Metallic *(Medium)* / BLACK MINK, Metallic	63 / 80	Black	●	●			●	●	●			●	●
	BEALE ST BLUE, Metallic *(Medium)* / FROST WHITE	64 / 72	White	●	●			●	●				●	●
	BEALE ST BLUE, Metallic *(Medium)* / BLACK MINK, Metallic	64 / 80	White	●	●			●	●				●	●
	REGATTA BLUE, Metallic *(Dark)* / ASCOT GRAY, *(Light)*	65 / 62	White	●	●			●	●				●	●
	REGATTA BLUE, Metallic *(Dark)* / BLACK MINK, Metallic	65 / 80	White	●	●			●	●				●	●
	ALAMOSA AQUA, Metallic *(Medium)* / FROST WHITE	68 / 72	Black	●				●					●	
	ALAMOSA AQUA, Metallic *(Medium)* / BLACK MINK, Metallic	68 / 80	Black	●				●					●	
	HUNTER GREEN, Metallic *(Dark)* / BLACK MINK, Metallic	71 / 80	White	●		●	●	●			●	●	●	
	WILLOW GREEN, METALLIC *(Medium)*/WHITE	75 / 72	Black	●		●	●	●			●	●	●	
	WILLOW GREEN, Metallic *(Medium)* / BLACK MINK, Metallic	75 / 80	Black	●		●	●	●			●	●	●	
	POMPEII YELLOW/FROST WHITE	76 / 72	Black	●			●	●				●	●	
	POMPEII YELLOW/BLACK MINK, Metallic	76 / 80	Black	●			●	●				●	●	
	BUTTERNUT BEIGE, Metallic *(Medium)* / FROST WHITE	77 / 72	Black	●		●		●			●		●	
	BUTTERNUT BEIGE, Metallic *(Medium)* / BLACK MINK, Metallic	77 / 80	Black	●		●		●			●		●	
	CORDOBA BROWN, Metallic *(Dark)* / ASCOT GRAY, *(Light)*	78 / 62	White	●		●		●			●		●	
	CORDOBA BROWN, Metallic *(Dark)*/WHITE	78 / 72	White	●		●		●			●		●	
	CORDOBA BROWN, Metallic *(Dark)* / BLACK MINK, Metallic	78 / 80	White	●		●		●			●		●	
	BITTERSWEET ORANGE, Metallic/WHITE	79 / 72	Black	●		●		●			●		●	
	BITTERSWEET ORANGE, Metallic / BLACK MINK, Metallic	79 / 80	Black	●		●		●			●		●	

NOTE: 2 Door Hardtop and 4 Door Sedan Vinyl covered roofs.

Revised 6-24-68
¢ Revised 8-12-68

1969 AMBASSADOR
Comparative Dimensions
FULL-SIZE AUTOMOBILES
4-DR. SEDANS

	Ambassador		Chevrolet		Ford		Fury	
	'69	'68	'69*	'68	'69*	'68	'69*	'68
Wheelbase	122.0	118.0	119.0	119.0	121.0	119.0	¢120.0	119.0
Length	206.5	202.5	¢215.9	214.7	#214.0	213.3	¢214.5	213.0
Width	77.2	77.2	¢ 79.8	79.6	# 79.8	78.0	¢ 79.6	77.7
Height	54.7	54.7	¢ 55.5	55.8	# 55.0	55.8	¢ 56.6	55.8
Front Overhang	32.9	32.9		36.4	# 38.4	37.4		34.5
Rear Overhang	51.6	51.6		59.3	# 54.6	56.9		59.5
Front Tread	60.0	58.6	¢ 62.5	62.5	¢ 63.0	62.0	¢ 62.1	62.0
Rear Tread	60.0	58.5	¢ 62.4	62.4	¢ 64.0	62.0	¢ 60.7	60.7
Turning Circle	42.8	39.0		41.0		43.6		42.8
Head Room, Front	39.8	39.8		38.9	¢ 39.2	38.9	¢ 38.8	39.5
Head Room, Rear	37.8	37.8		37.9	¢ 37.4	37.8	¢ 38.4	37.7
Leg Room, Front	42.0**	42.6		41.7	¢ 42.1	41.9	¢ 41.8	41.8
Leg Room, Rear	38.6	38.6		39.5	¢ 38.7	37.6	¢ 38.6	37.0
Total Leg Room	# 80.6	81.2		81.2	¢ 80.8	79.5	¢ 80.4	78.8
Hip Room, Front	60.3	60.3		63.7	¢ 62.3	62.6		63.4
Hip Room, Rear	60.4	60.4		62.9	¢ 62.3	62.7		63.3
Shoulder Room, Front	60.0	60.0		62.4	¢ 62.0	60.0	¢ 63.4	60.0
Shoulder Room, Rear	60.0	60.0		61.3	¢ 61.8	59.9	¢ 62.8	60.0
Usable Luggage Cap.	18.2	18.2		17.0	¢ 18.0	19.1		19.5

* Anticipated dimensions
** Due to suspended accelerator pedal

Revised 6-24-68
¢ Revised 8-12-68

1969 AMBASSADOR
Comparative Dimensions
FULL-SIZE AUTOMOBILES
4-DR. SEDANS

	Ambassador		Catalina		Le Sabre		Mercury		Polara & Monaco	
	'69	'68	'69*	'68	'69	'68	'69*	'68	'69*	'68
Wheelbase	122.0	118.0	122.0	121.0	123.0		124.0	123.0	¢122.0	122.0
Length	206.5	202.5	¢217.5	216.5	217.5		¢221.8	220.1	¢220.8	219.0
Width	77.2	77.2	¢ 79.8	79.8	80.0		¢ 79.8	77.9	¢ 79.6	80.0
Height	54.7	54.7	¢ 54.8	54.8	55.5		¢ 55.1	56.0	¢ 56.6	56.3
Front Overhang	32.9	32.9		37.9	38.0			38.5		36.0
Rear Overhang	51.6	51.6		57.6	56.5			58.6		61.0
Front Tread	60.0	58.6	¢ 64.0	63.0	63.0		¢ 63.0	62.0	¢ 62.1	62.0
Rear Tread	60.0	58.5	¢ 64.0	64.0	63.0		¢ 64.0	62.0	¢ 60.7	60.7
Turning Circle	42.8	39.0		42.8	42.7			43.6		43.5
Head Room. Front	39.8	39.8		39.1	39.1		¢ 38.7	38.9	¢ 38.8	39.9
Head Room, Rear	37.8	37.8		37.7	37.7		¢ 37.3	37.7	¢ 38.4	38.5
Leg Room, Front	42.0**	42.6		42.4	42.2		¢ 41.7	41.9	¢ 41.8	41.8
Leg Room, Rear	38.6	38.6		38.1	39.0		¢ 38.3	37.6	¢ 39.7	39.0
Total Leg Room	# 80.6	81.2		80.5	81.2		¢ 80.0	79.5	¢ 81.5	80.8
Hip Room, Front	60.3	60.3		63.8	63.8		¢ 62.3	62.6		63.3
Hip Room, Rear	60.4	60.4		62.4	62.9		¢ 62.3	62.7		63.3
Shoulder Room, Front	60.0	60.0		62.3	62.3		¢ 62.0	60.0	¢ 63.4	60.0
Shoulder Room, Rear	60.0	60.0		61.4	61.4		¢ 61.8	59.9	¢ 62.8	60.0
Usable Luggage Cap.	18.2	18.2		18.9	16.2		¢ 20.6	19.1		18.0

* Anticipated dimensions
** Due to suspended accelerator pedal

Revised 6-24-68
¢ Revised 8-12-68

1969 AMBASSADOR
Comparative Dimensions
FULL-SIZE AUTOMOBILES
WAGONS

	Ambassador		Chevrolet		Ford		Fury	
	'69	'68	'69*	'68	'69*	'68	'69*	'68
Wheelbase	122.0	118.0	119.0	119.0	121.0	119.0	122.0	122.0
Length	207.0	203.0		213.9	¢212.0	213.9		216.0 (6 Pass.) 217.0 (8 Pass.)
Width	77.2	77.2		79.6	¢ 79.8	78.0		78.0
Height	55.4	55.4		56.7	¢ 56.8	57.2		57.7
Front Overhang	32.9	32.9		36.4		37.4		34.0
Rear Overhang	52.1	52.1		58.5		57.5		60.0
Front Tread	60.0	58.6		63.5	¢ 63.0	62.0		62.0
Rear Tread	60.0	58.5		63.4	¢ 64.0	62.0		60.7
Turning Circle	42.8	39.0		41.0		43.6		43.5
Head Room, Front	39.8	39.8		39.2	¢ 39.4	39.0		40.1
Head Room, Rear	38.6	38.6		38.8	¢ 39.6	40.0		39.6
Leg Room, Front	42.0***	42.6		41.7	¢ 42.1	41.9		41.8
Leg Room, Rear	38.6	38.6		37.5	¢ 37.1	36.8		37.9
Total Leg Room	# 80.6	81.2		79.2	¢ 79.2	78.7		79.7
Hip Room, Front	60.3	60.3		63.7	¢ 62.3	62.6		63.4
Hip Room, Rear	60.4	60.4		63.1	¢ 62.4	62.7		63.3
Shoulder Room, Front	60.0	60.0		62.3	¢ 62.0	60.0		60.0
Shoulder Room, Rear	60.0	60.0		61.4	¢ 62.0	59.9		60.0
Usable Luggage Cap.	99.1	94.6		106.1	¢105.3**	103.0**		96.9**

* Anticipated dimensions
** Underfloor storage not included
*** Due to suspended accelerator pedal

Revised 6-24-68
¢ Revised 8-12-68

1969 AMBASSADOR
Comparative Dimensions
FULL-SIZE AUTOMOBILES
2-DR. HARDTOPS

	Ambassador		Chevrolet		Ford		Fury	
	'69	'68	'69*	'68	'69*	'68	'69*	'68
Wheelbase	122.0	118.0	119.0	119.0	121.0	119.0	119.0	119.0
Length	206.5	202.5	¢215.9	214.7	¢214.0	213.3		213.0
Width	77.2	77.2	¢ 79.8	79.6	¢ 79.4	78.0		77.7
Height	53.6	53.6	¢ 55.5	54.3	¢ 54.5	54.6		55.2
Front Overhang	32.9	32.9		36.4		37.4		34.5
Rear Overhang	51.6	51.6		59.3		56.9		59.5
Front Tread	60.0	58.6	¢ 62.5	62.5	¢ 63.0	62.0		62.0
Rear Tread	60.0	58.5	¢ 62.4	62.4	¢ 64.0	62.0		60.7
Turning Circle	42.8	39.0		41.0		43.6		42.8
Head Room, Front	38.7	38.7		38.3	¢ 39.2	38.0		38.4
Head Room, Rear	36.5	36.5		37.3	¢ 37.4	37.9		38.1
Leg Room, Front	42.0**	42.6		41.6	¢ 42.1	41.9		41.8
Leg Room, Rear	35.5	35.5		34.9	¢ 38.7	36.1		34.7
Total Leg Room	# 77.5	78.1		76.5		78.0		76.5
Hip Room, Front	60.8	60.3		63.7	¢ 62.3	62.6		63.4
Hip Room, Rear	59.5	59.5		55.5	¢ 61.1	61.7		63.8
Shoulder Room, Front	60.0	60.0		62.4	¢ 62.0	60.0		60.0
Shoulder Room, Rear	59.0	59.0		61.0	¢ 60.6	58.7		60.0
Usable Luggage Cap.	18.2	18.2		17.3	¢ 18.0	18.9		19.5

* Anticipated dimensions
** Due to suspended accelerator pedal

1969
Standard Size
Competition

Chevrolet	- Reskin, (new in 1965)
Ford	- New (new in 1965)
Fury	- New (new in 1965)
Pontiac	- Reskin
Buick LeSabre	- Reskin
Oldsmobile	- Reskin
Mercury	- New
Polara & Monaco	- New

1969
REBEL

TABLE OF CONTENTS

	Page
New Features	
- Product Highlights	1, 2
- New Exterior and Interior Styling Features	3-5
- New Chassis and Mechanical Features	6
- New Optional Equipment and Optional Equipment Changes	6
- Model and Series Availability	7
- New Safety Features	7
1969 Product	
- Standard Safety Features	8, 9
- Series Features and Differentials	10-14
- Retained Standard Features	15, 16
- Engine, Transmission and Rear Axle Availability	17
- Tire Availability	18
- Factory-Installed Options	19-22
- Dealer-Installed Options and Accessories	23, 24
- Exterior Colors, Vinyl Roofs, Two-Tone Combinations and Interior Trim Selections	25, 26
- Dimensions	27-29
- Competition	30

1969 REBEL

Product Highlights

The 1969 Rebel features a new front appearance derived from a new grille and new head lamp bezels. The new rear appearance features new tail lamp assemblies, a new deck lid and a new lower deck opening panel.

The new tail lamp assemblies provide a new rear side appearance through the new wrap around design. Block lettering is used for all exterior and interior "Rebel" nameplates replacing the script used in some areas on the 1968 model.

The Rebel is offered in two series and six models for 1969 instead of the three series and nine models as in 1968.

Rebel

4-Door Sedan	6915
2-Door Hardtop	6919
4-Door Station Wagon	6918

Rebel SST

4-Door Sedan	6915-7
2-Door Hardtop	6919-7
4-Door Station Wagon	6918-7

The 550 and 770 series are dropped and replaced by a low-line "Rebel" series. This now provides consistency throughout all AM lines in that the base series in each line is given the general line name with higher-line models in each series given suffix designations. The SST high-line series is retained with two new models for 1969, the SST 4-door sedan and the SST 4-door station wagon.

All convertibles are dropped for 1969.

The 1969 Rebel line interiors feature an all-new instrument panel, all-new door trim panel designs, all-new seat trim designs and new cloth fabrics. The Basketweave (low-line) and Ventilair (high-line) vinyl fabrics are retained but in new trim patterns.

All Rebel line station wagons feature the new Dual-Swing tailgate as standard equipment. The roof rack remains standard equipment for 1969.

The front and rear tread increase to a new wide 60". This is an increase of 1.4" for the front tread and 1.5" for the rear tread.

1969 REBEL
PRODUCT HIGHLIGHTS (cont.)

The 232 CID, 145 HP six-cylinder engine becomes standard across the line. The 290 CID V-8 engine is dropped as standard in the SST series and becomes optional across the line.

A new higher capacity air-conditioning system is optionally offered. The new system features higher cooling capacity, higher air movement capacity and a new passenger side instrument panel outlet. A new instrument panel "Command Air" ventilation system is offered optionally. This system features all the normal air-conditioning outlets and a high capacity, three-speed blower motor and, therefore, can be easily and less expensively converted to air-conditioning at a later date.

All the 1968 SAFE-COMMAND safety features are carried into 1969. Further new features are added to continue American Motors' traditional policy of vehicle safety.

A detailed description of the new Rebel for 1969 follows.

1969 REBEL

New Exterior

Styling Features

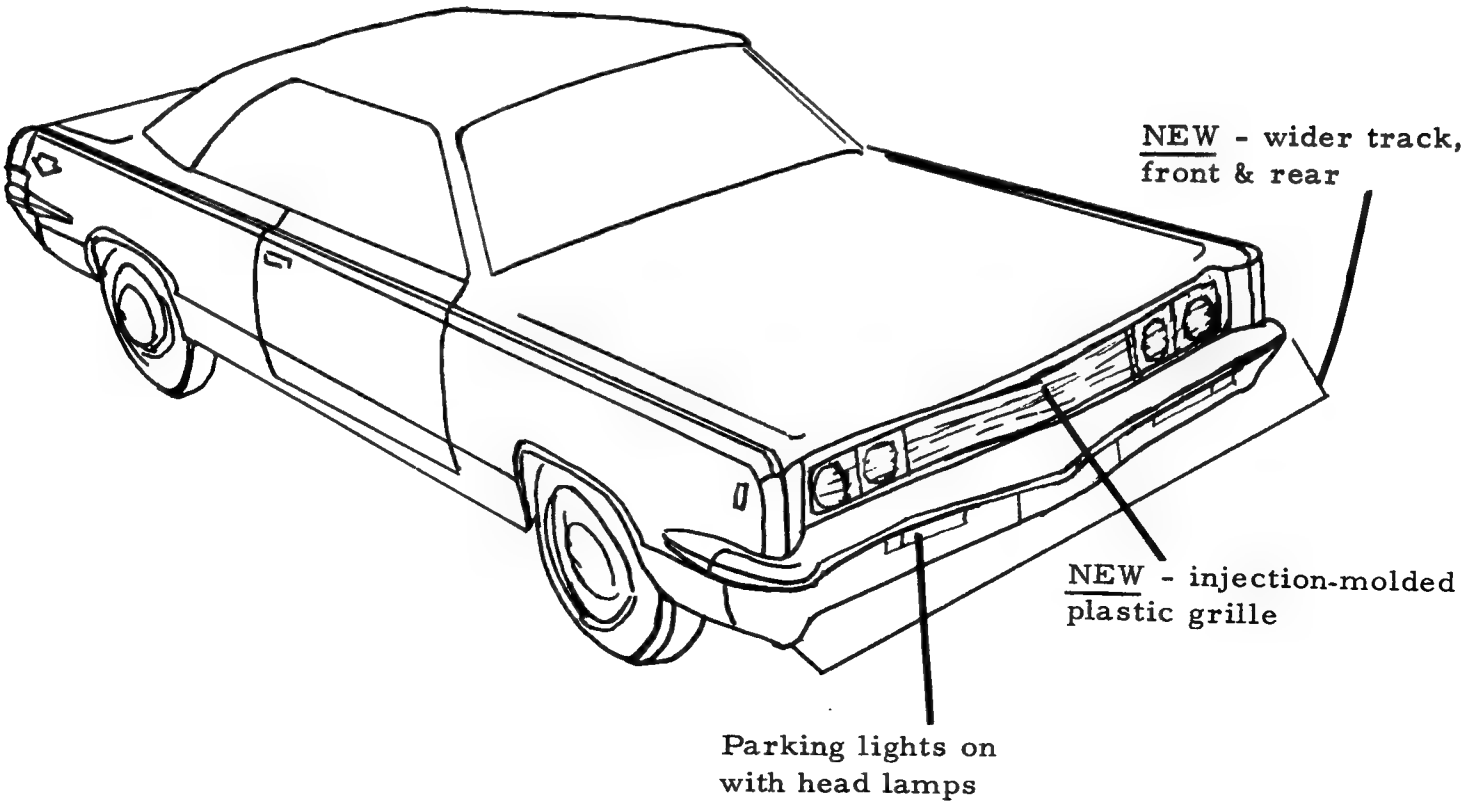

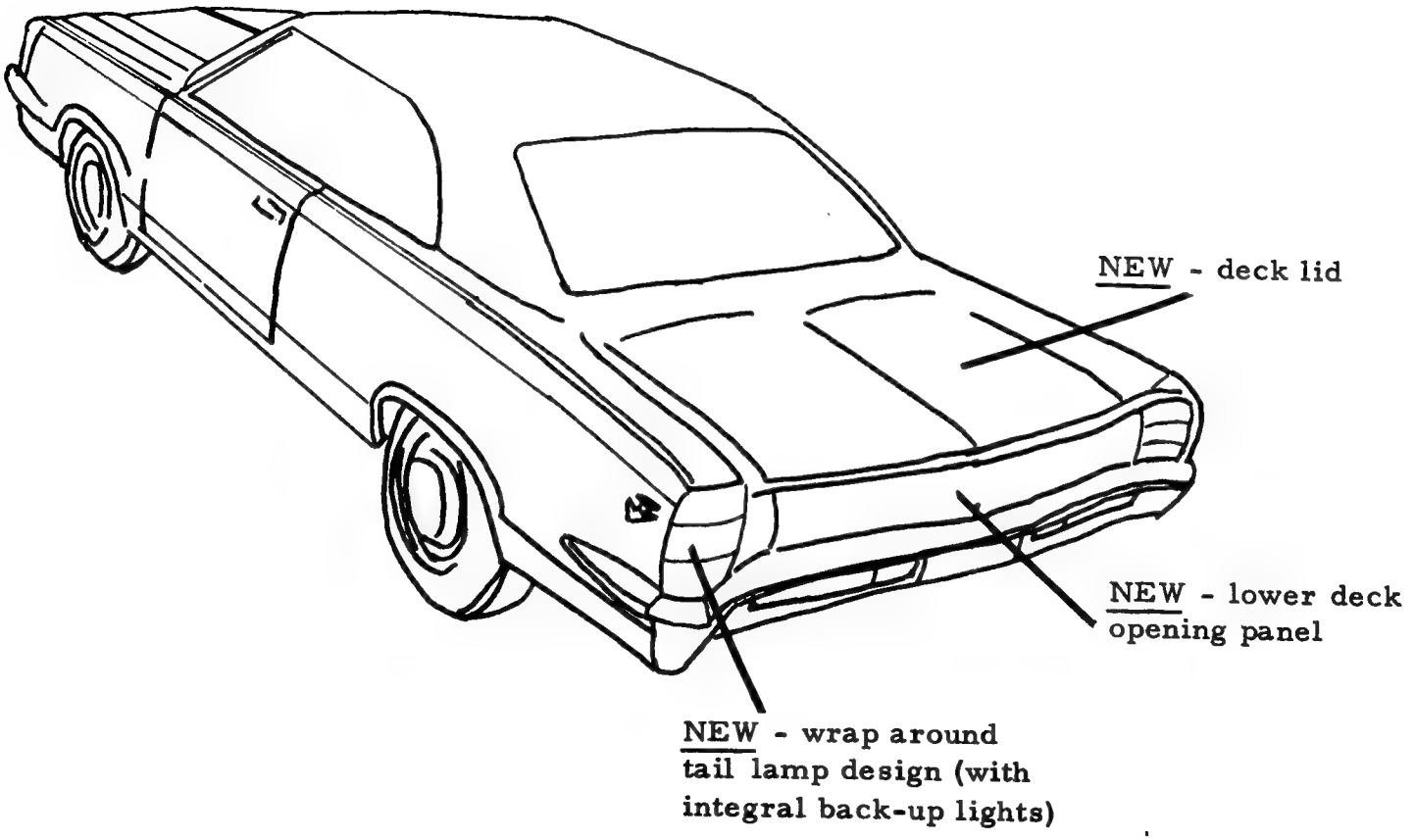

1969 REBEL

New Exterior Styling Features

NEW - injection-molded plastic (ABS) grille featuring full-width ribbing
NEW - rear styling
- NEW - deck lid
- NEW - lower deck opening panel
- NEW - wrap around tail lamp design (with integral back-up lights)

NEW - paint treatment on hub caps and optional wheel covers

Revised 6-24-68

1969 REBEL

New Interior Styling Features

NEW - Instrument Panel:

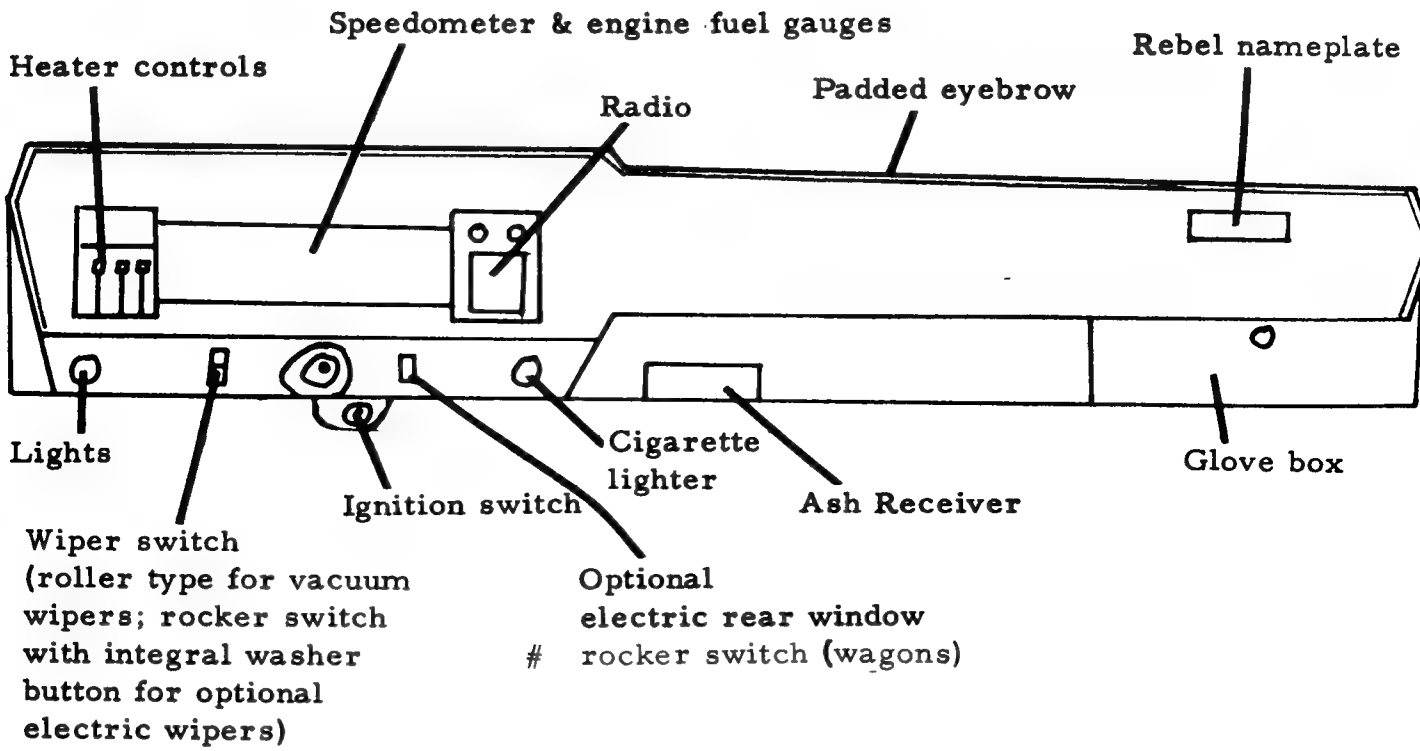

NEW - seat trim styles, colors and fabrics
NEW - door trim panel patterns with new deeper padded appearance
NEW - instrument panel with padded eyebrow
NEW - 100% nylon cut pile carpet on SST series (running change for late 1968)

1969 REBEL

New Chassis And Mechanical Features

NEW - wider track front and rear - both become 60.0"
¢ NEW - "Guard-Glo", the safer head lamp with a reserve filament that continues to glow when main filaments burn out. A safety feature that helps eliminate the "one-eyed" menace
NEW - "Clear-Power 24" battery with transparent, light-weight polypropylene case
NEW - steering linkage geometry for improved handling
NEW - rear suspension geometry for more stabilized ride and reduced vibration
NEW - suspended accelerator pedal
NEW - longer upper control arm bushings for softer and quieter ride
NEW - 55-amp alternator (replaces 40-amp alternator) with "All-Season" air conditioning option

Chassis and Mechanical Changes

The secondary (outer) door seals are removed on all 4-door models
See General (Section 6) also

¢ New Optional Equipment

NEW* -higher capacity "All-Season" air-conditioning system featuring faster initial cooling to lower interior temperatures with more air movement capacity
NEW* -"Command Air" ventilation system featuring all air-conditioning instrument panel outlets and a high-capacity, three-speed blower motor
NEW- passenger side instrument panel outlet included with A/C and the above ventilation system
NEW - F78 x 14 Wide Aspect, Fiberglass-Belted ("Polyglas") White Wall Tires (standard white wall tires remain optional)

Optional Equipment Changes

Overdrive available on 232 CID, 145 HP six-cylinder engine only, was this engine and 290 CID, 200 HP V-8 engine
Exterior paint stripe available with base series only, new trim strip for SST
Hood insulation no longer standard on SST. Optional insulation group now available across the series
Four-speed manual transmission not available
Tachometer dropped

* Where either "All-Season" air conditioning or "Command Air" ventilation are installed on a Rebel (base), the SST instrument panel will be standard

1969 REBEL

Model Availability

Body Styles	Rebel (Base)	Rebel SST	Total
4-Door Sedans	6915	6915-7	2
2-Door Hardtops	6919	6919-7	2
4-Door Station Wagons	6918	6918-7	2
Total	3	3	6

The 550 and 770 series are dropped. The Rebel series replaces these as a low-line series

The Rebel SST series remains the high-line series and in 1969, the number of models is increased to three with the addition of the following new models:

SST 4-Door Sedan
SST 4-Door Station Wagon

All convertibles are dropped

New Safety Features

Redesigned adjustable headrests
Increased depth of new instrument panel crash pad eyebrow to eliminate reflections
Relocation of ignition switch to reduce knee impact hazard
Redesigned radio push buttons for larger corner radii to reduce head impact hazard
Air-conditioning outlets protected by crash pad eyebrow

1969 REBEL

"SAFE-COMMAND" SAFETY FEATURES

Seating and Seat Belts (cont.)

Folding rear-seat-back latches for wagons
Front seat headrests
Padded front seat back

Locks and Door Handles

High-strength door locks
"Pre-Set-Impulse" front door locking system
Safety-shaped interior door handles
Flush-contoured outside door handles
Two-key locking system

Accessories and Equipment

4-way hazard warning signals
Lane-changer feature for turn signals
Safety vanity mirror (opt.)
Automatic back-up lights
Shift-command for automatic or manual operation on automatic transmission (opt.)
Day/Night inside rearview mirror with twin pivots and protected edges
Rearview mirror, left side exterior
Windshield washers - manual (electric opt.)
Non-glare windshield wipers
Vacuum power booster windshield wiper motors (electrical opt.)
Defrosters and defoggers
Side-of-Car safety markers, front and rear
¢ Guard-Glo head lamps
¢ Parking lights illuminated with head lights

1969 REBEL

Series Features

REBEL (Base):

Exterior:

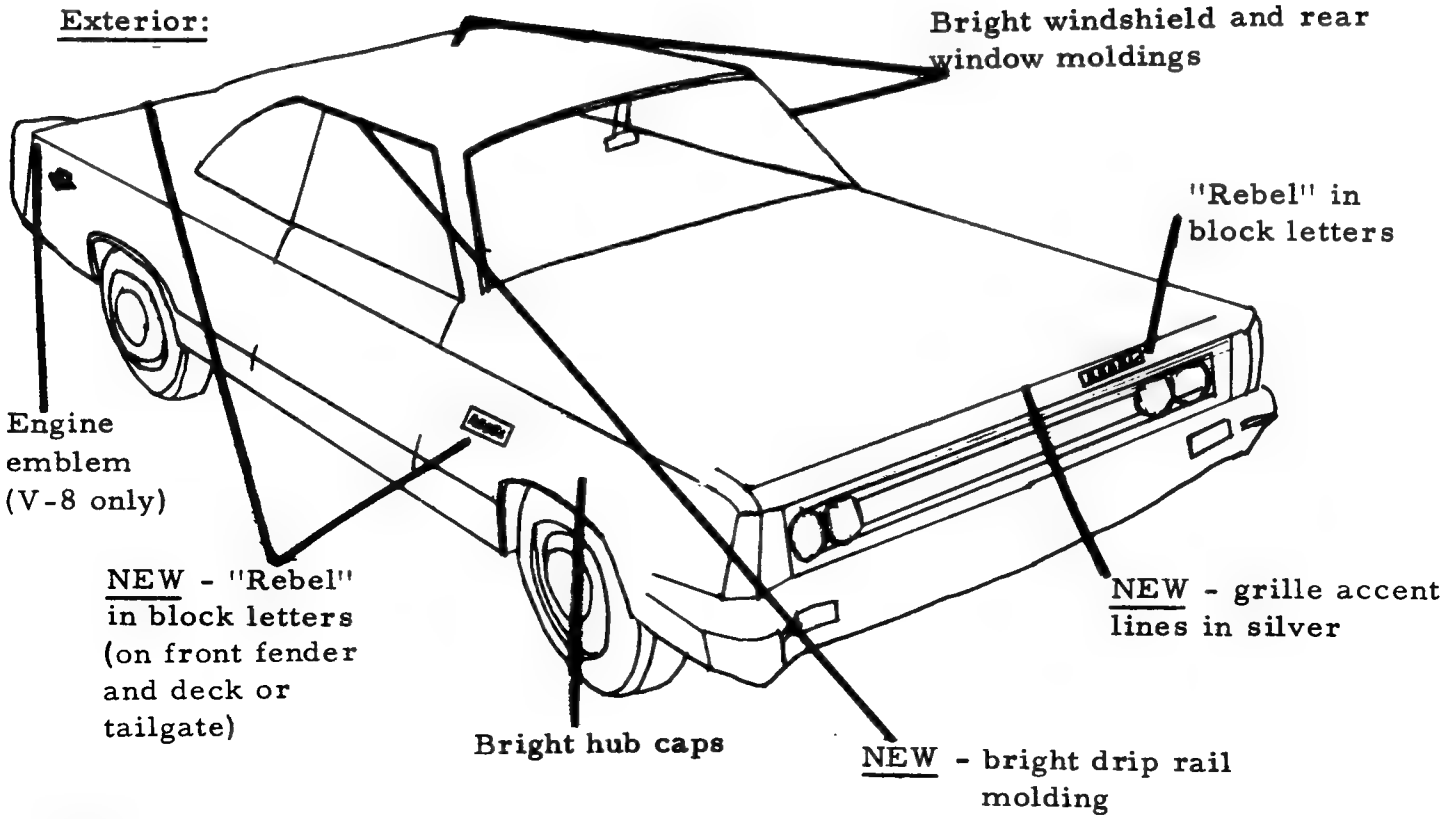

Interior:

NEW - Instrument panel

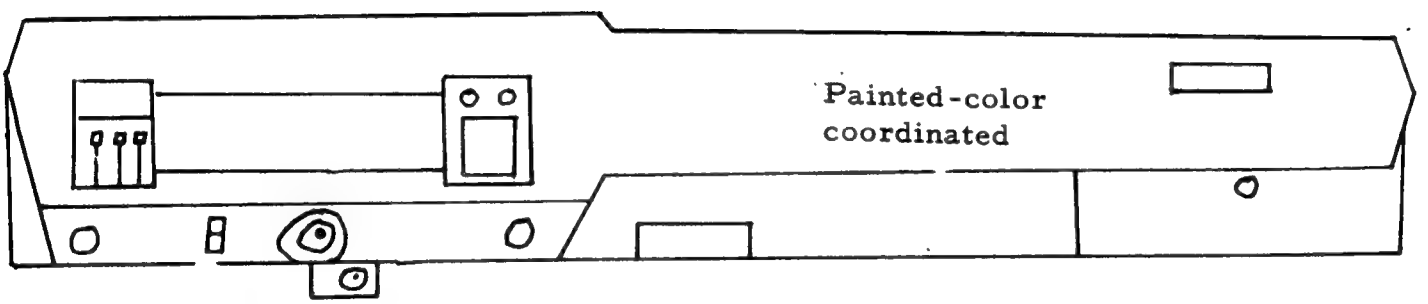

NEW - unique door trim panels and seat designs
NEW - "Doric" pattern cloth seat trim
NEW - "Basketweave" pattern embossed vinyl seat trim optional (standard on wagons)

1969 REBEL

Rebel (Base) Features

Exterior:

Grille accented with bright paint lines
Bright windshield and rear window reveal moldings
Bright drip-rail moldings
11 Exterior paint colors
Bright hub caps
Rebel lettering on hood (driver side), fender (to the rear of the wheel opening) and deck lid/tailgate in bold block letters

Interior:

232-IV, 145 HP six-cylinder engine standard
Cigarette lighter
Color keyed rubber floor mats in four colors (Blue, Brown, Avocado and Black)
Front armrests
Rear armrests on 4-door meodels
Bright instrument panel and door trim moldings
Unique door trim panels
Unique seat trim patterns
Rear ash receivers on 4-door models

Revised 6-24-68

1969 REBEL

Series Features

REBEL SST: Same as Rebel (base) except as noted below.

Exterior:

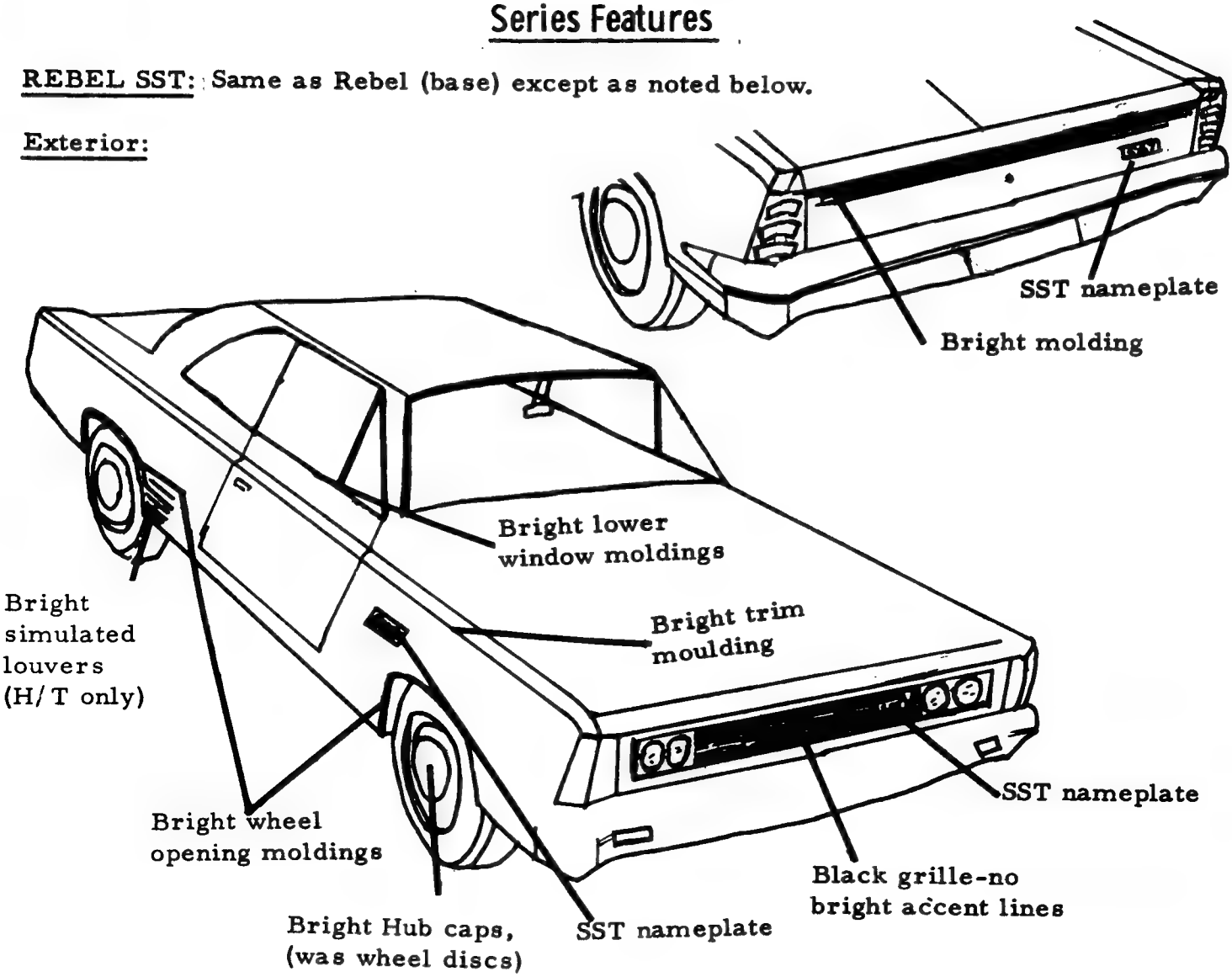

Interior:

NEW Instrument Panel:

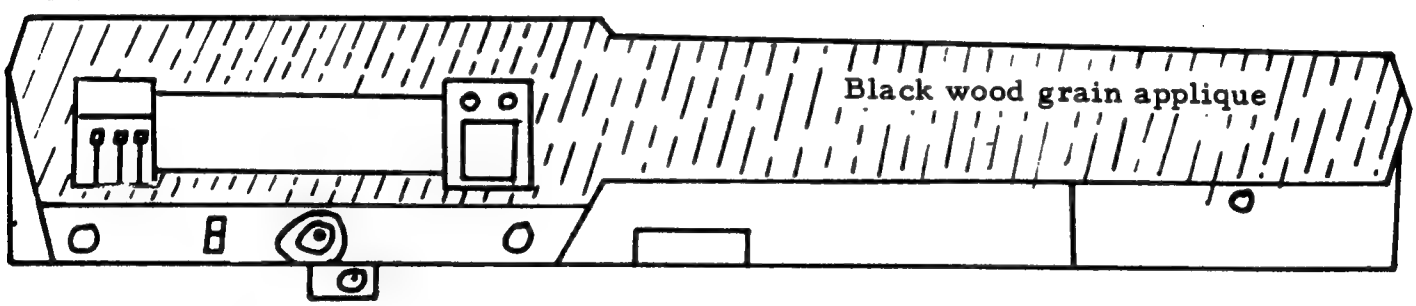

NEW - unique door trim panels and seat design
NEW - "Cloister" pattern cloth seat trim
Optional "Ventilair" breathable vinyl seat trim (standard on wagons)

1969 REBEL

Series Differentials

Rebel SST Over Rebel

Exterior:

Black grille - no bright accent lines
SST nameplates on grille, front fender behind wheel opening and lower deck opening panel
Bright full-length body side moldings
Bright full-wheel opening moldings
Bright lower window moldings
Bright full-length lower deck opening panel molding
Bright simulated louvers on lower quarter panel forward of the wheel opening (H/T only)

Interior:

Black wood applique on instrument panel
Custom steering wheel
100% Nylon, cut pile carpet (running change for late 1968)
Glove-box lock and front door dome or "C" pillar switches
Unique door trim panels with SST nameplate
Rear armrests for two-door model
Unique seat trim patterns and cloth materials

1969 REBEL
Series Features

Wagons:

Rebel (base):

New - Dual-Swing tailgate is standard
Exterior and interior trim same as other models within series
Cargo area rubber mat is color keyed in Blue, Brown, Avocado and Black
Hidden luggage compartment
Luggage rack remains standard

Rebel SST Over Rebel (base):

Exterior and interior trim same as other models within series
Cargo area mat is 100% nylon, cut pile carpet
Lockable hidden luggage compartment

1969 REBEL

Retained Standard Features

Body:

All-welded, Single-Unit body construction (safe, strong, durable) ("Advanced Unit Construction")
Deep-Dip body rustproofing
Weather-Eye heater
Fresh-air ventilation
Triple-coated Lustre-Gard acrylic enamel (14 colors)
Molded Cushioned Acoustical ceiling
Curved side-glass
Injection-molded plastic (ABS) grille and headlight housings
Two-position front-door checks
Cigarette lighter
Front ash receiver
Rear ash receivers (except base Rebel Hardtop)
Coil-spring seat construction (solid foam for wagon third seat)
Front seat foam cushion
Dome or side pillar lights
Hidden compartment for station wagons (lock on SST)
Two coat hooks
Extruded aluminum door window frames on all 4-door models
Neoprene door seals on all Hardtops

Mechanical:

Coil springs at all four wheels
Direct-action, independent front suspension with sway bar on V-8's and wagons
Four-link, trailing arm rear suspension
Hypoid-gear rear axle
Self-adjusting brakes with bonded linings
Brake diameter for Six (except wagons) 9"; lining area 153.8 square inches
Brake diameter for V-8 (and wagons) 10"; lining area 167.5 square inches
Standard 4-ply-rating, 2-ply tires; Sixes and V-8's, 7.35 x 14, 7.75 x 14 for wagons (see "Options")
Engine-oil filter, full flow

Revised 6-24-68

1969 REBEL

RETAINED STANDARD FEATURES

Mechanical: (cont.)

Fuel filters in tank and at carburetor. In-line filter just ahead of carburetor, was in fuel pump
Fuel-tank approximate capacity, 21.5 gallons (19 for 3-seat wagons)
All-Season engine coolant
Anti-smog positive crankcase vent
"Engine-Mod" exhaust emission control system
Automatic choke

Electrical:

Dual horns for SST (one for base Rebel)
Standard 35-amp electronic alternator and sealed transistorized
voltage regulator (NEW - 55-amp with air conditioning)
NEW - "Clear-Power 24" Intercell battery (was Power-Guard);
50-amp standard on Sixes and "290" V-8's, 60-amp standard
on "343" and "390" V-8's, 70-amp optional
Name and type of battery changed but electrical characteristics retained
Dual horizontal head lamps

1969 REBEL

Engine, Transmission & Rear Axle Availability

@

Engine	Transmission	Rear Axle Ratios + Std.	Rear Axle Ratios + Opt. ***
145 HP Torque-Command 232 CID Six	3-Speed Manual; Column (std.)	3.15:1	3.54:1
	Overdrive; Column (opt.)	3.54:1	---
Standard	Shift-Command Automatic; Column (opt.)	3.15:1	---
155 HP Torque-Command 232 CID Six	Shift-Command Automatic; Column (opt.)	3.15:1	---
Optional			
200 HP Typhoon V-8 290 CID	Shift-Command Automatic; Column (opt.)	2.87:1	3.15:1
Optional	Shift-Command Automatic; Console (opt.)*	2.87:1	3.15:1
235 HP Typhoon V-8 343 CID	Shift-Command Automatic; Column (opt.)	2.87:1	3.15:1
Optional			
# 280 HP Typhoon V-8 343 CID**	Shift-Command Automatic; Column (opt.)	2.87:1	3.15:1
Optional	Shift-Command Automatic; Console (opt.)*	2.87:1	3.15:1

*Available only on SST hardtop with bucket seats
**Dual exhaust available optionally on 280 HP, 343 Cu. In. engine
***Available at no extra cost
@+Also 3.73:1, 3.91:1, 4.10:1, 4.44:1, and 5.00:1 available as extra cost DEALER-INSTALLED options for V-8

Revised 6-24-68
¢ Revised 8-12-68

1969 REBEL

Tire Availability

TIRE SIZES	REBEL SIX		REBEL V-8	
	Sedans & Hardtops	Station Wagons	Sedans & Hardtops	Station Wagons
7.35 x 14, 4-Ply Rated 2-Ply Rayon (Or Vytacord) Black	STD	NA	STD	NA
7.35 x 14, 4-Ply Rated 2-Ply Rayon (Or Vytacord) White	OPT	NA	OPT	NA
7.75 x 14, 4-Ply Rated 2-Ply Rayon (Or Vytacord) Black	OPT	STD	OPT	STD
7.75 x 14, 4-Ply Rated 2-Ply Rayon (Or Vytacord) White	OPT	OPT	OPT	OPT
7.75 x 14, 8-Ply Rated 4-Ply Rayon (Or Vytacord) Black & White	OPT	OPT	OPT	OPT
8.25 x 14, 4-Ply Rated 2-Ply Rayon (Or Vytacord) Black ¢ (With 6" Rim Width Wheel)	NA	OPT	NA	OPT
8.25 x 14, 4-Ply Rated 2-Ply Rayon (Or Vytacord) White ¢ (With 6" Rim Width Wheel)	NA	OPT	NA	OPT
8.25 x 14, 8-Ply Rated 4-Ply Rayon (Or Vytacord) Black & White ¢ (With 6" Rim Width Wheel)	NA	OPT	NA	OPT
F78 x 14, 4-Ply Rated 2-Ply Fiberglass-Belted "Polyglas" (Wide Aspect, Extra Per- # formance White Wall)	# NA	# NA	OPT	# NA

1969 REBEL
Factory-Installed Options

Symbols:
E - Extra Cost
NA - Not Available
STD - Standard

	Code	Base	SST
Paint and Upholstery:			
Two-Tone Paint	-1-	E	E
Special Application of AM Colors (covers two-tone combinations not offered, paint colors not offered in a given line)		E	E
All Vinyl Seat Upholstery (standard on station wagons)		E	E
All Vinyl Seat Upholstery for Individual Seat Only		E	E
Vinyl Covered Roof - Black, Off-White, Blue	BKV WHV BUV	NA	E
# **Engines:**			
232 CID, 145 HP Torque-Command Six	145	STD	STD
232 CID, 155 HP Torque-Command Six (2-barrel carburetor)	155	E	E
290 CID, 200 HP Typhoon V-8 (2-barrel carburetor)	200	E	E
343 CID, 235 HP Typhoon V-8 (2-barrel carburetor)	235	E	E
343 CID, 280 HP Typhoon V-8 (4-barrel carburetor)	280	E	E
Dual Exhaust for 343 CID, 280 HP engine	DE	E	E
Performance Groups and Items:			
Twin-Grip Differential	TGD	E	E
# **Transmissions:**			
Shift Command, Column Shift 6-Cylinder	A	E	E
290 CID V-8		E	E
343 CID V-8		E	E

Revised 6-24-68

Revised 6-24-68

1969 REBEL

FACTORY-INSTALLED OPTIONS

	Code	Base	SSI
Transmissions: (cont.)			
Shift Command, Floor Shift with Console and Bucket Seats Only (with V-8 only but not available with 343 CID, 235 HP engine)	C	NA	E
Overdrive-Column Shift (for 232 CID, 145 HP engine only)	O	E	E
Power Assists:			
Power Steering (recommended with air conditioning)	PS	E	E
Power Brakes	PB	E	E
Power Disc Brakes (V-8 only)	DP	E	E
Power Lift Tailgate Window	PW1	E	E
Cruise-Command Automatic Speed Control System (with V-8 and automatic transmission only)	ASC	E	E
# **Seating Items:**			
Individually Adjustable Reclining Seats	IS	E	E
Reclining Bucket Seats (Hardtop Only)*	SB	NA	E
Reclining Bucket Seats with Front Arm Rest and Center Cushion (Hardtop Only)	SBA	NA	E
Third Seat, Station Wagon (includes power # rear window and two seat belts)	TS	NA	E
Radios and Tape Equipment:			
AM Push Button Radio	RP	E	E
AM-FM Push Button Radio	RFM	E	E
Stereo 8 Tape Player with two rear mounted speakers (4-Door Sedan & Hardtop only)	STP	E	E
Duo-Coustic Rear Speaker (available with radio only on sedans and hardtops)	DCS	E	E

* Available With Console Shift Only

1969 REBEL

FACTORY-INSTALLED OPTIONS (cont.)

	Code	Base	SST
Appearance Items:			
Exterior Paint Stripe	ETS	E	NA
Appearance Group - includes wheel opening moldings and wheel discs	APC	E	NA
Custom Steering Wheel	CR	E	STD
Sports Steering Wheel	SSW	NA	E
Wheel Discs	WD	E	E
Turbo-Cast Wheel Covers	TC	E	E
Wire-Wheel Covers	WC	E	E
Bumper Guards - Front and Rear (not available on wagons)	BG4	E	E
Bumper Guards - Front only (wagons only)	BG2	E	E
* Wood-Grain Paneling, Side Only - Wagons Only (not available with two-tone paint)	WO	NA	E
Heating and Air Conditioning:			
# All-Season Air Conditioning (includes heavy-duty engine cooling system and 55-amp alternator)	AC	E	E
"Command Air" Ventilation System (includes all ventilation outlets used with the All-Season Air-Conditioning System and high-capacity, three-speed blower motor)	CA	E	E
Solex Glass - Windshield Only	SW	E	E
Solex Glass - All Windows (recommended with air conditioning)	SG	E	E
# Convenience Groups and Items:			
Visibility Group - includes remote-control left outside mirror, clock, visor-vanity mirror, electric three-speed windshield wipers and electric washers	VG	E	E
¢ Light Group - includes trunk or cargo light, two courtesy lights, glove-box light, ash receiver light, parking brake warning light, lights-on warning buzzer and front door switches (Base) or rear door switches (SST)	LG	E	E
Adjust-O-Tilt Steering Wheel (not available with manual column shift)	ASW	E	E

¢ Revised 8-12-68
* Revised 7- 9-68
# Revised 6-24-68

Revised 6-24-68
¢ Revised 8-12-68

1969 REBEL

FACTORY-INSTALLED OPTIONS (cont.)

	Code	Base	SST
¢ **Heavy-Duty Equipment:**			
Handling Package, 6-Cylinder Sedans and Hardtops (includes front sway bar, heavy-duty springs and shocks)	HP	E	E
Handling Package, 6-Cylinder Wagons and all V-8's (includes heavy-duty springs and shocks)	HP	E	E
Heavy-Duty Cooling System (includes heavy-duty radiator, power-flex fan and fan shroud)	HDC	E	E
Heavy-Duty 70-Amp Battery	HB	E	E
# Heavy-Duty 70-Amp Battery and 55-Amp Alternator (for car less air conditioning)	4A7	E	E
Engine Block Heater	BH	E	E
Automatic Transmission Oil Cooler (standard with V-8)	ATC	E	E
Miscellaneous:			
Insulation Group - includes undercoating and hood insulation	INC	E	E

1969 REBEL

Dealer-Installed Accessories

Cruise Command Kit (V-8 with automatic transmission only)
Tissue Dispenser
Compass - Illuminated
Litter Basket and Tissue Dispenser
Window Ventshades (except Hardtops)
Window Screens; Pairs - Front and Rear Door (except Hardtops)
Tailgate Window Screen - Station Wagons
Child's Safety Vest
Rear Door Child Safety Locks
Spotlight
License Plate Frames
Spare Tire Covers
Gas Door Guard
Rubber and Vinyl Floor Mats (Pairs - Door-to-Door Front and Rear)
Air-Lift Air Springs
Load Levelers
Fuel Filter Mileage Minder - Extra Fuel Filtration
Luggage Straps - Pair
Luggage Carrier - Vinyl - All Station Wagons
Luggage Carrier - Vinyl - All Sedans (two sizes)
Rear Deck Luggage Rack
¢ Ski Carrier - Top Mounted
Stereo Tape Players
AM Radios
FM/AM Radios
Rear Seat Speakers (except Station Wagons)
Locking Gas Caps
Door Edge Guards (2 and 4 piece sets)
Visor-Vanity Mirror
Remote-Control Mirrors
Right Hand Rearview Mirrors
Engine Block Heaters - Six and V-8
Bumper Guards
Wheel Covers
Wire-Wheel Covers
Turbo-Cast Wheel Covers
Air-Conditioning Kits
Courtesy and Glove-Box Light Kits
Parking Brake and Headlight Warning Buzzer Kits
Power Brake Kits
Rear Window Defogger Kit (Sedan and Hardtops)
Rear Shoulder-Belt Kits
Trunk-Light Kit
¢ Fuse Kit
¢ Protective Trim Moldings
¢ Special Rear Axle Ratio Gear Sets

¢ Revised 8-12-68

1969 REBEL

¢ DEALER-INSTALLED ACCESSORIES (cont.)

Clock Kit
Dual Exhaust

1969 REBEL
SEAT, TRIM AND COLOR AVAILABILITY

				SERIES	"REBEL"						
				TRIM	CLOTH (Std.) "DORIC"			VINYL (Opt.) (Std. on Wagons) "BASKETWEAVE"			
				TRIM COLORS	BLUE	BROWN	AVOCADO	CHARCOAL	BLUE	BEIGE	AVOCADO
MODELS	SEAT TYPES AVAILABLE			"T" CODES	953	956	957	951	953	956	957
4 DOOR SEDAN	BENCH CUSHION—NON-RECLINING BACK (Std.)			†	A	A	A	B	B		
	INDIVIDUAL CUSHION—INDIVIDUAL RECLINING BACK (Opt.)				C	C	C	D√	D√	D	D
4 DOOR ST. WAG.	BENCH CUSHION—NON-RECLINING BACK (Std.)							B	B	B	B
	INDIVIDUAL CUSHION—INDIVIDUAL RECLINING BACK (Opt.)				C	C	C	D	D√	D	D
2 DOOR HARD-TOP	BENCH CUSHION—NON-RECLINING BACK (Std.)				A	A	A	B	B	B	B
	INDIVIDUAL CUSHION—INDIVIDUAL RECLINING BACK (Opt.)				C	C	C	D	D	D√	D
	EXTERIOR COLORS	BODY COLOR	WHEEL COLOR	OPT. STRIPE							
11 SOLID COLOR—STANDARD	MATADOR RED	39	39	White		●		●		●	
	ASCOT GRAY, *(Light)*	62	80	Black	●			●	●		
	CASTILLIAN GRAY, Metallic *(Medium)*	63	80	Black	●			●	●		
	BEALE ST. BLUE, Metallic *(Medium)*	64	65	White	●			●	●		
	REGATTA BLUE, Metallic *(Dark)*	65	65	White	●			●	●		
	HUNTER GREEN, Metallic *(Dark)*	71	71	White		●	●	●		●	●
	FROST WHITE	72	80	Black	●	●	●	●	●	●	●
	WILLOW GREEN, Metallic *(Medium)*	75	75	Black		●	●	●		●	●
	POMPEII YELLOW	76	75	Black			●	●			●
	BUTTERNUT BEIGE, Metallic *(Medium)*	77	78	Black		●		●		●	
	BLACK MINK, Metallic	80	80	White	●	●	●	●	●	●	●
8 REVERSIBLE TWO-TONES E.C. OPTION	ASCOT GRAY, *(Light)* / CASTILLIAN GRAY, Metallic *(Medium)*	62 / 63	80	Black	●			●	●		
	BEALE ST. BLUE, Metallic *(Medium)* / REGATTA BLUE, Metallic *(Dark)*	64 / 65	65	White	●			●	●		
	WILLOW GREEN, Metallic *(Medium)* / POMPEII YELLOW	75 / 76	75	Black			●	●			●
	BLACK MINK, Metallic / FROST WHITE	80 / 72	80	White / Black	●	●	●	●	●	●	●
16 NON-REVERSIBLE TWO-TONES EXTRA COST OPTION	MATADOR RED / ASCOT GRAY, *(Light)*	39 / 62	39	White		●		●		●	
	MATADOR RED / BLACK MINK, Metallic	39 / 80	39	White		●		●		●	
	ASCOT GRAY, *(Light)* / BLACK MINK, Metallic	62 / 80	80	Black	●			●	●		
	CASTILLIAN GRAY, Metallic *(Medium)* / FROST WHITE	63 / 72	80	Black	●			●	●		
	CASTILLIAN GRAY, Metallic *(Medium)* / BLACK MINK, Metallic	63 / 80	80	Black	●			●	●		
	BEALE ST. BLUE, Metallic *(Medium)* / FROST WHITE	64 / 72	65	White	●			●	●		
	BEALE ST. BLUE, Metallic *(Medium)* / BLACK MINK, Metallic	64 / 80	65	White	●			●	●		
	REGATTA BLUE, Metallic *(Dark)* / ASCOT GRAY, *(Light)*	65 / 62	65	White	●			●	●		
	REGATTA BLUE, Metallic *(Dark)* / BLACK MINK, Metallic	65 / 80	65	White	●			●	●		
	HUNTER GREEN, Metallic *(Dark)* / BLACK MINK, Metallic	71 / 80	71	White		●	●	●		●	●
	WILLOW GREEN, Metallic *(Medium)* / FROST WHITE	75 / 72	75	Black		●	●	●		●	●
	WILLOW GREEN, Metallic *(Medium)* / BLACK MINK, Metallic	75 / 80	75	Black		●	●	●		●	●
	POMPEII YELLOW / FROST WHITE	76 / 72	75	Black			●	●			●
	POMPEII YELLOW / BLACK MINK, Metallic	76 / 80	75	Black			●	●			●
	BUTTERNUT BEIGE, Metallic *(Medium)* / FROST WHITE	77 / 72	78	Black		●		●		●	
	BUTTERNUT BEIGE, Metallic *(Medium)* / BLACK MINK, Metallic	77 / 80	78	Black		●		●		●	

*Wheel color matches body color on Canadian built cars.

†Letter codes identify fabric with seat type.

1969 REBEL SST
SEAT, TRIM AND COLOR AVAILABILITY

MODELS	SEAT TYPES AVAILABLE	TRIM TYPE	CLOTH—(Std.) "CLOISTER"				VINYL (Opt.) (Std. on Wagons) "VENTILAIR"					
		TRIM COLORS	PLATINUM	BLUE	BROWN	AVOCADO	PLATINUM	BLUE	RED	BEIGE	AVOCADO	YELLOW
		"T" CODES	972	973	976	977	972	973	975	976	977	979
4 DOOR SEDAN	BENCH CUSHION—NON-RECLINING BACK (Std.) †		A	A	A	A	B					
	INDIVIDUAL CUSHION—INDIVIDUAL RECLINING BACK (Opt.)		C	C✓	C	C	D	D✓		D	D	
4 DOOR ST. WAG.	BENCH CUSHION—NON-RECLINING BACK (Std.)						B	B		B	B	
	INDIVIDUAL CUSHION—INDIVIDUAL RECLINING BACK (Opt.)		C	C	C	C	D	D✓		D	D	
2 DOOR HARD-TOP	BENCH CUSHION—NON-RECLINING BACK (Std.)		A	A	A	A	B	B	B	B		B
	INDIVIDUAL CUSHION—INDIVIDUAL RECLINING BACK (Opt.)		C	C	C	C	D	D	D	D		D
	BUCKET SEAT—RECLINING BACK (Opt.)		E	E			F		F✓			F

	EXTERIOR COLORS	BODY COLOR	WHEEL* COLOR	OPTIONAL "LEVANT" GRAIN VINYL COVERED ROOF: 1 BLACK OR WHITE, 2 BLACK, WHITE OR BLUE (Medium)									
14 SOLID COLORS—STANDARD	MATADOR RED	39	39	●1				●1		●1			
	ASCOT GRAY, *(Light)*	62	80	●2	●2			●2	●2	●1			
	CASTILLIAN GRAY, Metallic *(Medium)*	63	80	●2	●2			●2	●2	●1			
	BEALE ST. BLUE, Metallic *(Medium)*	64	65	●2	●2			●2	●2				
	REGATTA BLUE, Metallic *(Dark)*	65	65	●2	●2			●2	●2				
	ALAMOSA AQUA, Metallic *(Medium)*	68	68	●1				●1					
	HUNTER GREEN, Metallic *(Dark)*	71	71	●1		●1	●1	●1			●1	●1	●1
	FROST WHITE	72	80	●2	●2	●1	●1	●2	●2	●1	●1	●1	●1
	WILLOW GREEN, Metallic *(Medium)*	75	75	●1		●1	●1	●1			●1	●1	●1
	POMPEII YELLOW	76	75	●1			●1	●1				●1	●1
	BUTTERNUT BEIGE, Metallic *(Medium)*	77	78	●1		●1		●1			●1		
	CORDOBA BROWN, Metallic *(Dark)*	78	78	●1		●1		●1			●1		
	BITTERSWEET ORANGE, Metallic	79	79	●1		●1		●1			●1		
	BLACK MINK, Metallic	80	80	●2	●2	●1	●1	●2	●2	●1	●1	●1	●1
10 TWO-TONE REVERSIBLE E.C. OPTION	ASCOT GRAY, *(Light)* / CASTILLIAN GRAY, Metallic *(Medium)*	62 / 63	80	●	●			●	●	●			
	BEALE ST BLUE, Metallic *(Medium)* / REGATTA BLUE, Metallic *(Dark)*	64 / 65	65	●	●			●	●				
	WILLOW GREEN, Metallic *(Medium)* / POMPEII YELLOW	75 / 76	75	●			●	●				●	●
	BUTTERNUT BEIGE, Metallic *(Medium)* / CORDOBA BROWN, Metallic *(Dark)*	77 / 78	78	●		●		●			●		
	BLACK MINK, Metallic/FROST WHITE	80 / 72	80	●	●	●	●	●	●	●	●	●	●
23 TWO-TONE NON-REVERSIBLE EXTRA COST OPTION	MATADOR RED/ASCOT GRAY, *(Light)*	39 / 62	39	●				●		●			
	MATADOR RED/BLACK MINK, Metallic	39 / 80	39	●				●		●			
	ASCOT GRAY, *(Light)*/BLACK MINK, Metallic	62 / 80	80	●	●			●	●	●			
	CASTILLIAN GRAY, Metallic *(Medium)* / FROST WHITE	63 / 72	80	●	●			●	●	●			
	CASTILLIAN GRAY, Metallic *(Medium)* / BLACK MINK, Metallic	63 / 80	80	●	●			●	●	●			
	BEALE ST. BLUE, Metallic *(Medium)* / FROST WHITE	64 / 72	65	●	●			●	●				
	BEALE ST BLUE, Metallic *(Medium)* / BLACK MINK, Metallic	64 / 80	65	●	●			●	●				
	REGATTA BLUE, Metallic *(Dark)* / ASCOT GRAY, *(Light)*	65 / 62	65	●	●			●	●				
	REGATTA BLUE, Metallic *(Dark)* / BLACK MINK, Metallic	65 / 80	65	●	●			●	●				
	ALAMOSA AQUA, Metallic *(Medium)* / FROST WHITE	68 / 72	68	●				●					
	ALAMOSA AQUA, Metallic *(Medium)* / BLACK MINK, Metallic	68 / 80	68	●				●					
	HUNTER GREEN, Metallic *(Dark)* / BLACK MINK, Metallic	71 / 80	71	●		●	●	●			●	●	●
	WILLOW GREEN, Metallic *(Medium)*/WHITE	75 / 72	75	●		●	●	●			●	●	●
	WILLOW GREEN, Metallic *(Medium)* / BLACK MINK, Metallic	75 / 80	75	●			●	●				●	●
	POMPEII YELLOW/FROST WHITE	76 / 72	75	●			●	●				●	●
	POMPEII YELLOW/BLACK MINK, Metallic	76 / 80	75	●			●	●				●	●
	BUTTERNUT BEIGE, Metallic *(Medium)* / FROST WHITE	77 / 72	78	●		●		●			●		
	BUTTERNUT BEIGE, Metallic *(Medium)* / BLACK MINK, Metallic	77 / 80	78	●		●		●			●		
	CORDOBA BROWN, Metallic *(Dark)* / ASCOT GRAY, *(Light)*	78 / 62	78	●		●		●			●		
	CORDOBA BROWN, Metallic *(Dark)*/WHITE	78 / 72	78	●		●		●			●		
	CORDOBA BROWN, Metallic *(Dark)* / BLACK MINK, Metallic	78 / 80	78	●		●		●			●		
	BITTERSWEET ORANGE, Metallic/WHITE	79 / 72	79	●		●		●			●		
	BITTERSWEET ORANGE, Metallic / BLACK MINK, Metallic	79 / 80	79	●		●		●			●		

*Wheel color matches body color on Canadian built cars. †Letter codes identify fabric with seat type.

Revised 6-24-68
¢ Revised 8-12-68

1969 REBEL
Comparative Dimensions

MID-SIZE AUTOMOBILES
4-DR. SEDANS

	Rebel		Torino Fairlane		Chevelle		Belvedere		Tempest	
	'69	'68	'69 **	'68	'69**	'68	'69 **	'68	'69**	'68
Wheelbase	114.0	114.0	¢ 116.0	116.0	¢ 116.0	116.0	¢ 116.0	116.0	¢ 116.0	116.0
Length	197.0	197.0	201.1	201.1	200.9	201.1	202.7	202.7	205.5	204.7
Width	77.2	77.2	74.8	74.5	76.0	75.7	76.4	76.4	75.8	74.8
Height	54.6	54.6	54.1	55.0	53.5	53.3	55.4	54.7		52.5
Front Overhang	31.9	31.9		35.9		37.5		33.6		40.1
Rear Overhang	51.1	51.1		49.2		47.6		53.1		48.6
Front Tread	60.0	58.2	58.8	58.8	59.0	59.0		59.5	61.0	60.0
Rear Tread	60.0	58.5	58.5	58.9	59.0	59.0		58.5	60.0	60.0
Turning Circle	37.5	37.5		41.5		41.0		40.6		40.9
Head Room, Front	39.8	39.8	38.6	38.5		38.2	38.6	38.6		38.5
Head Room, Rear	37.8	37.8	37.4	37.5		37.1	37.4	37.4		37.1
Leg Room, Front	42.0*	42.6	42.4	42.5		42.7	41.9	41.9		41.2
Leg Room, Rear	38.6	38.6	36.0	36.0		34.7	36.3	36.3		33.8
Total Leg Room	# 80.6	81.2	78.4	78.5		77.4	78.2	78.2		75.0
Hip Room, Front	60.3	60.3	59.5	59.5		59.6		60.4		59.9
Hip Room, Rear	60.4	60.4	59.5	59.5		59.6		60.4		59.9
Shoulder Room, Front	60.0	60.0	58.0	58.0		58.1	58.1	58.1		58.8
Shoulder Room, Rear	60.0	60.0	58.0	58.0		57.5	58.1	58.1		58.6
Usable Luggage Cap.	18.2	18.2	16.2	16.2		12.8		15.9		13.1

* Due to suspended accelerator pedal
** Anticipated dimensions

Revised 6-24-68
¢ Revised 8-12-68

1969 REBEL
Comparative Dimensions

MID-SIZE AUTOMOBILES
4-DR. WAGONS

	Rebel		Torino Fairlane		Chevelle		Belvedere		Tempest	
	'69	'68	'69+	'68	'69	'68	'69	'68	'69+	'68
Wheelbase	114.0	114.0	¢ 113.0	113.0	116.0		117.0		¢ 112.0	116.0
Length	198.0	198.0	203.9	203.9	207.1		208.0		211.0	211.0
Width	77.2	77.2	74.6	74.1	75.7		78.0		76.3	74.8
Height	55.1	55.1	56.1	56.0	55.2		59.5			54.5
Front Overhang	31.9	31.9		35.9	37.5		33.4			40.1
Rear Overhang	52.1	52.1		55.1	53.6		57.6			54.9
Front Tread	60.0	58.2	58.8	58.8	59.0		59.5		61.0	60.0
Rear Tread	60.0	58.5	58.5	58.9	59.0		59.2		60.0	60.0
Turning Circle	37.5	37.5		41.5	41.0		40.9			40.9
Head Room, Front	39.8	39.8	38.6	38.5	38.1		39.4			38.0
Head Room, Rear	39.6	39.6	39.2	39.0	38.3		34.0			38.3
Leg Room, Front	42.0*	42.6	42.4	42.0	42.7		41.9			42.7
Leg Room, Rear	38.6	38.6	34.5	34.0	34.8		39.3			34.8
Total Leg Room	# 80.6	81.2	76.9	76.0	77.5		81.2			77.5
Hip Room, Front	60.3	60.3	59.5	59.0	59.6		60.4			59.7
Hip Room, Rear	60.4	60.4	59.5	58.8	59.4		60.4			59.4
Shoulder Room, Front	60.0	60.0	58.0	57.5	58.3		58.1			58.3
Shoulder Room, Rear	60.0	60.0	58.0	57.5	57.4		58.1			57.4
Usable Luggage*	91.1	91.1	85.2	85.2	84.0		84.9			83.1

* Underfloor storage capacity not included
** Due to suspended accelerator pedal
\+ Anticipated dimensions

Revised 6-24-68
¢ Revised 8-12-68

1969 REBEL
Comparative Dimensions

MID-SIZE AUTOMOBILES
2-DR. HARDTOPS

	Rebel		Torino Fairlane		Chevelle		Belvedere Satellite		Tempest	
	'69	'68	'69**	'68	'69	'68	'69**	'68	'69**	'68
Wheelbase	114.0	114.0	¢ 116.0	116.0	112.0		¢ 116.0	116.0	¢ 112.0	116.0
Length	197.0	197.0	201.1	201.0	197.1		202.7	202.7	201.5	204.7
Width	77.2	77.2	74.6	73.9	75.7			75.2	75.8	74.8
Height	53.5	53.5	52.8	53.5	52.7			52.5		54.4
Front Overhang	31.9	31.9		35.9	37.5			33.4		40.1
Rear Overhang	51.1	51.1		49.2	47.6			33.6		48.6
Front Tread	60.0	58.2	58.8	58.8	59.0			59.5	61.0	60.0
Rear Tread	60.0	58.5	58.5	58.9	59.0			59.2	60.0	60.0
Turning Circle	37.5	37.5		41.5	39.4			40.6		40.9
Head Room, Front	38.7	38.7	37.7	37.5	37.4			37.3		38.5
Head Room, Rear	36.5	36.5	36.6	36.0	36.4			31.5		37.1
Leg Room, Front	42.0*	42.6	42.4	42.5	42.7			41.8		41.5
Leg Room, Rear	35.5	35.5	33.7	33.0	32.2			33.1		33.8
Total Leg Room	# 77.5	78.1	76.1	75.5	74.9			74.9		75.3
Hip Room, Front	60.3	60.3	59.0	59.0	59.6			60.6		59.6
Hip Room, Rear	59.5	59.5	58.0	58.5	58.3			60.6		59.6
Shoulder Room, Front	60.0	60.0	57.5	57.5	58.1			58.1		58.8
Shoulder Room, Rear	59.0	59.0	56.5	56.5	56.8			58.1		58.7
Usable Luggage	18.2	18.2	16.2	16.2	14.6			15.6		13.1

* Due to suspended accelerator pedal
** Anticipated dimensions

AMX

36

1969

AMX

TABLE OF CONTENTS

Page

New Features

- Product Highlights 1
- New Exterior and Interior Styling Features 2
- New Chassis and Mechanical Features 2
- New Optional Equipment and Optional Equipment Changes 2, 3
- Model and Series Availability 3
- New Safety Features 3

1969 Product

- Standard Safety Features 4, 5
- Series Features and Differentials 6
- Retained Standard Features 7, 8
- Engine, Transmission and Rear Axle Availability 9
- Tire Availability 10
- Factory-Installed Options 10-12
- Dealer-Installed Options and Accessories 13
- Exterior Colors, Vinyl Roofs, Two-Tone Combinations and Interior Trim Selections 14
- Dimensions 15

1969 AMX

Product Highlights

The 1969 AMX is basically unchanged from the 1968 model as it was introduced in mid 1968. However, new features have been added to enhance the sports car image it has deservedly received.

The exterior remains unchanged with the exception that the choice of over-the-top racing stripe colors has been increased from two to five. The stripe remains as a part of the optional "Go" packages (as in 1968) and is not offered separately. Also, 12 exterior colors are offered with 10 of these new. A new-styled steel wheel which incorporates a trim ring is offered optionally.

Interior changes are more pronounced. A new 140 MPH speedometer and large face 0-8000 RPM tachometer are standard. A new grab handle above the glove box and a wood-grained applique on the center panel of the instrument panel are standard. "Ventilair" vinyl remains the standard interior, but an additional color is added, Platinum. A new convenience tray between the seats is added (with 4-speed transmission only). New leather seat trim is offered optionally in two colors, Charcoal and Saddle. This leather trim includes seat inserts, bolsters, and seat back side trim. The separately offered headrests, when ordered with the leather seat option, also will be covered in leather.

A new console which incorporates a stowage compartment is included with the optional Shift-Command automatic transmission. A center cushion and armrest are offered as a separate option with the standard 4-speed manual floor shift.

A detailed description of the 1969 AMX follows.

New "Command Air" ventilation system is offered optionally and incorporates the air-conditioning outlets and a high-capacity, three-speed blower motor. Therefore, this system can be easily and less expensively converted to air conditioning at a later date.

1969 AMX

New Styling Features

Exterior:

NEW - additional colors (3) for over-the-top racing stripe which is included in the optional "Go" packages
NEW - 10 exterior colors (2 carryover-Red and White)
NEW - paint treatment on standard "MAG" - STYLED wheel covers

Interior:

NEW - passenger grab handle above the glove box
NEW - wood-grained applique on center panel of instrument panel
NEW - 140 MPH speedometer and 0-8000 RPM large face tachometer
NEW - door trim panels with bright trim and wood-grain applique
NEW - 100% nylon, cut pile, molded carpet (running change for late 1968)
NEW - wood-grained applique on armrests
NEW - additional "Ventilair" seat trim color, Platinum
NEW - bright pedal trim
NEW - convenience tray between the seats (with 4-speed transmission only)

New Chassis and Mechanical Features

NEW - suspended accelerator pedal
¢ NEW - "Guard-Glo", the safer head lamp with a reserve filament that continues to glow when main filaments burn out. A safety feature that helps eliminate the "one-eyed" menace
NEW - "Clear-Power 24" battery with transparent, light-weight polypropylene case
NEW - 55-amp alternator (replaces 40-amp) with "All-Season" air conditioning option
¢ NEW - 6" wheel rim width standard (6 x 14 wheel)

¢ New Optional Equipment

NEW - leather seat trim offered in Charcoal or Saddle. Leather application includes seat inserts, bolsters and seat back side trim. The separately offered headrests, when ordered with the leather seat option, also will be in leather
NEW - "Mag" Styled Wheels with chrome trim rings and painted spiders (same wheel is utilized as in 1968 but with different styling)
NEW - wood-grained console with stowage area is included in Shift-Command automatic transmission option
NEW - armrest and center cushion (available with 4-speed floor transmission only)
NEW - "Command Air" ventilation system featuring air-conditioning outlets high-capacity, three-speed blower motor
NEW - the molded fiberglass headliner (currently used on Javelin, Rebel and Ambassador) replaces the present "Kivar" type headlining. This will be an early running change

1969 AMX

Optional Equipment Changes

Three additional colors are available for the over-the-top racing stripe which is a part of the option "Go" packages. New colors - Red, Blue, Silver; carryover colors - Black and White

Rally-Pak is changed to include a vacuum gauge with the oil/amp gauge - DEALER INSTALLED

Clock is now available in small instrument panel recess to the left of the speedometer as tachometer moves to large recess to the right of speedometer

Model Availability

Body Style	Model
Sports Coupe	1
Total	1

1968 Models Discontinued - None

1968 Models Added - None

New Safety Features

Redesigned radio push buttons for larger corner radii to reduce head impact hazard

Two front seat headrests become standard

1969 AMX

"SAFE-COMMAND" Safety Features
(Standard unless otherwise noted)

Construction

Energy-absorbing front-end structural design
High-strength thick laminate windshield
Tempered safety glass, side and rear windows
Extra-strength door hinges
Padded "A" pillars and roof headers
Molded ceilings
Padded instrument panel
Break-away front ash receiver
Padded sun visors
Non-glare finish on interior and exterior parts

Controls and Instruments

Energy-absorbing steering column
Deep-dish impact absorbing steering wheel
Safety-shaped instrument control knobs
Safety automatic transmission shift pattern
Safety-styled instrument panel layout

Brakes and Wheels

Double-safety brake system with self-adjusting feature
Brake system warning light
Mechanical stoplight switch
Corrosion-resistant brake lines and fittings
Safety-rim wheels
Tread-wear indicators molded into tire tread

Seating and Seat Belts

Seat belts for all seating positions:
  a. Standard for all seating positions
  b. Two front seat belts retractable
Two front shoulder belts
Safety-seat and shoulder-belt anchorages
Safety-seat anchorages
Automatic lock with manual release folding front seats
Front seat headrests

¢ Revised 8-12-68

1969 AMX

"SAFE-COMMAND" SAFETY FEATURES (cont.)

Locks and Door Handles

High-strength door locks
"Pre-Set-Impulse" door locking system
Safety-shaped interior door handles
Flush-contoured outside door handles
Two-key locking system

Accessories and Equipment

4-way hazard warning signals
Lane-changer feature for turn signals
Safety vanity mirror (opt.)
Automatic back-up lights
Shift-command for automatic or manual operation on automatic transmission (opt.)
Day/Night inside rearview mirror with twin pivots and protected edges
Rearview mirror, exterior, left side
Windshield washers - manual (electric opt.)
Non-glare windshield wipers
Vacuum power booster windshield wiper motors (electrical opt.)
Defrosters and defoggers
Side-of-Car safety markers, front and rear
¢ Guard-Glo head lamps
¢ Parking lights illuminated with head lights

1969 AMX

Product Features

Exterior:

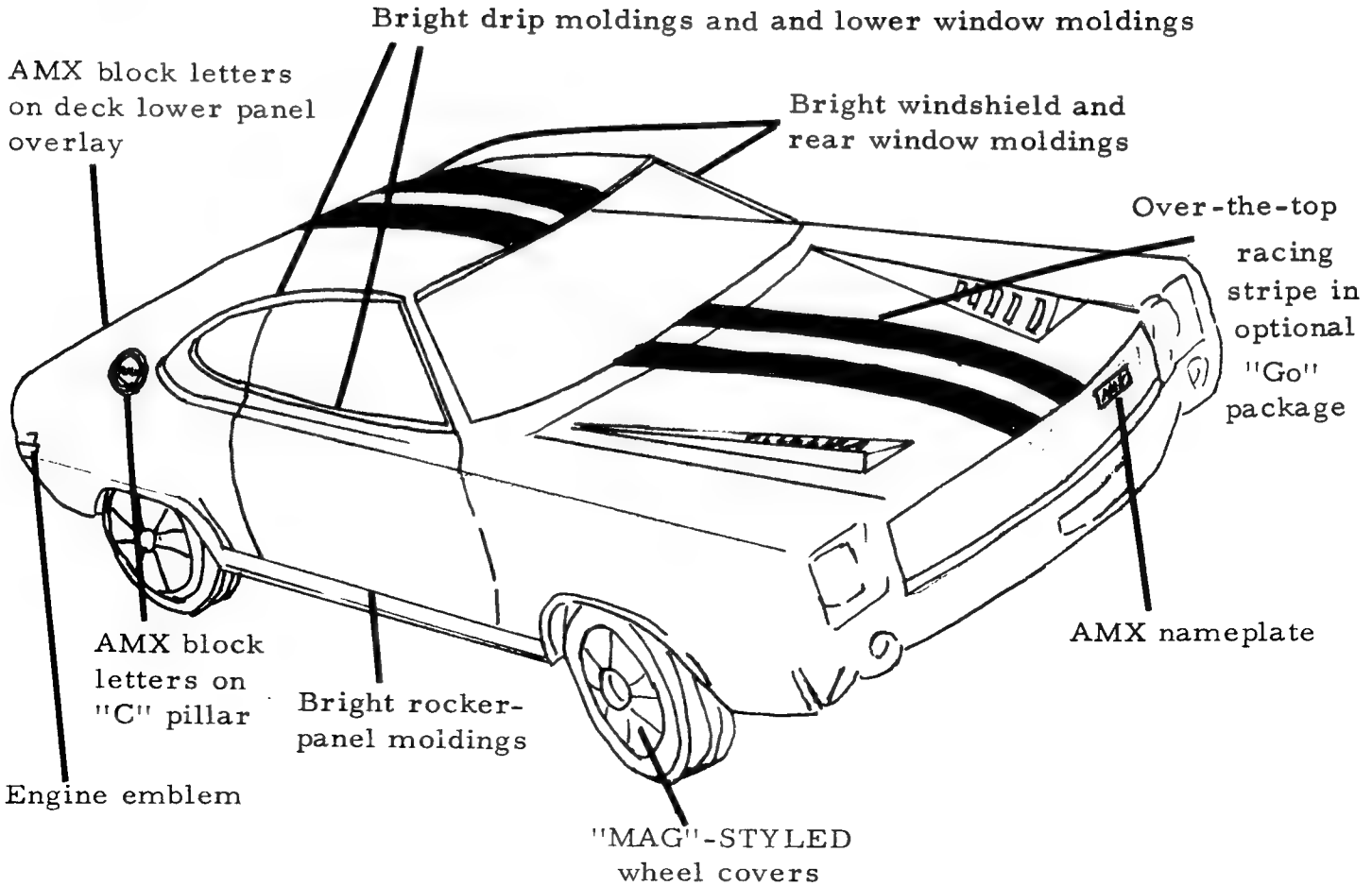

Interior:

Instrument Panel:

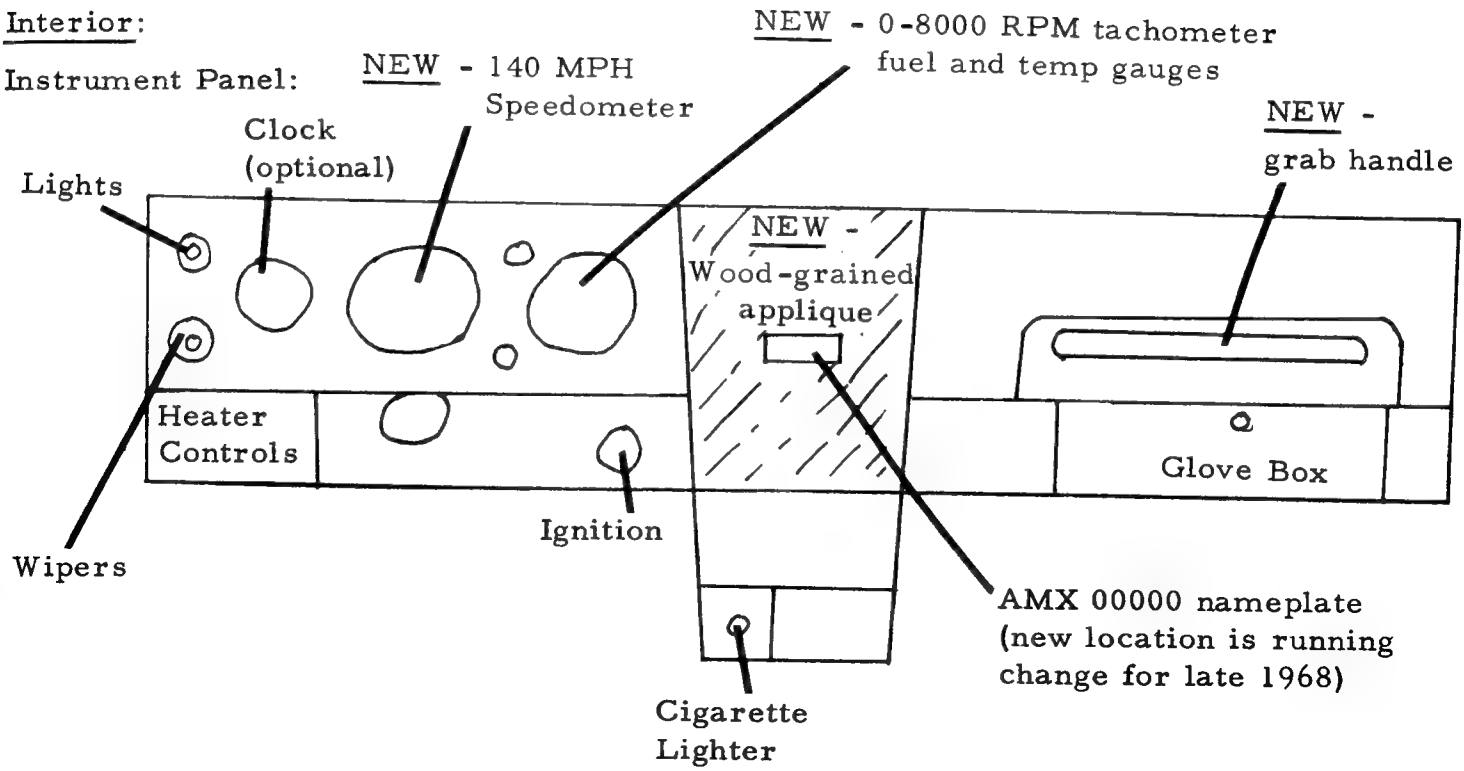

1969 AMX

Retained Standard Features

Body:

All-welded, steel, Single-Unit body construction. ("Advance Unit Construction")
Twin-hood blisters.
Circular AMX pillar emblems
Reclining "Ventilair" vinyl trimmed bucket seats
Foam-seat cushions
Weather-Eye heater
Fresh air "flo-thru" ventilation
Armrests with new wood-grain applique
Cigarette lighter
Full-length carpeting
Compartment lights
Wood-grain-look sports steering wheel
Bright rocker panel and side window moldings
Bright dual-exhaust outlets
Molded ceiling
Padded "A" pillars and roof headers
Hood insulation.

Mechanical:

E70 x 14 wide profile fiberglass belted black side wall tires (with Collapsible Space Saver Spare)
Direct-action, independent coil-spring front suspension with heavy-duty springs and shock absorbers
Heavy-duty front sway bar
Rear suspension with traction bars and heavy-duty semi-elliptical leaf springs and shock absorbers
Hypoid-gear rear axle
Recirculating ball-screw steering gear; turning diameter-33.5 ft.; standard gear-24.1:1 overall ratio and 5.1 turns lock to lock; optional "Quick-Ratio" gear-19.3:1 overall ratio and 4.0 turns lock to lock; optional power gear-18.1:1 overall ratio and 3.8 turns lock to lock
Self-adjusting brakes with bonded linings
Brake diameter 10"; lining area 167.5 square inches.
Anti-smog positive crankcase vent
"Engine-Mod" exhaust emission control system with automatic transmission
"Air-Guard" system with 4-speed manual transmission

Revised 6-24-68

1969 AMX

RETAINED STANDARD FEATURES (cont.)

Electrical:

Standard 35-amp electronic alternator and sealed transistorized voltage
regulator (NEW - 55-amp with air conditioning)
NEW - "Clear-Power 24" Intercell Battery (was Power-Guard): 50-amp standard on "290" V-8, 60-amp standard on other V-8's. Name and type of battery changed but electrical characteristics remain the same
70-amp battery optional
Dual horns
Single head lamps

@ Revised 7-31-68

1969 AMX

ENGINE, TRANSMISSION AND REAR AXLE AVAILABILITY

Engine	Transmission	Rear Axles** Standard	Rear Axles** Optional*	
225 HP Typhoon V-8 290 CID Standard	4-Speed Manual;Floor (std.) Shift-Command Automatic; Console (opt.)	3.54:1 2.87:1***	--- 3.15:1	@
280 HP Typhoon V-8 343 CID Optional	4-Speed Manual;Floor (std.) Shift-Command Automatic; Console (opt.)	3.54:1 2.87:1***	3.15:1 3.15:1	@
315 HP AMX V-8 390 CID Optional	4-Speed Manual;Floor (std.) Shift-Command Automatic; Console (opt.)	3.54:1 2.87:1***	3.15:1 3.15:1	@

* Available at no extra cost

@** Also 3.73:1, 3.91:1, 4.10:1, 4.44:1, and 5.00:1 available as extra cost DEALER-INSTALLED options

*** 3.15:1 is standard with "Go" packages

1969 AMX

Tire Availability

* TIRE SIZE	AMX
E70 x 14, 4-Ply Rated 2-Ply "Polyglas" (Fiberglass-Belted) Black	STD
E70 x 14, 4-Ply Rated 2-Ply "Polyglas" (Fiberglass-Belted) Red Line	OPT

Factory-Installed Options

Symbols:
- E - Extra Cost
- NA - Not Available
- STD - Standard

Paint and Upholstery:

	Code	AMX
Special Application of AM Colors	-	E
Leather Seat Upholstery	-	E

Engines:

290 CID, 225 HP Typhoon V-8 (4-barrel carburetor)	225	STD
343 CID, 280 HP Typhoon V-8 (4-barrel carburetor)	280	E
390 CID, 315 HP AMX V-8 (4-barrel carburetor)	315	E

Revised 6-24-68
¢ Revised 8-12-68

1969 AMX
FACTORY-INSTALLED OPTIONS (cont.)

Performance Groups and Items	Code	AMX
343 "Go" Package - Includes 343 CID, 280 HP Engine, Power Front Disc Brakes, E-70 x 14 Red-Line Fiberglass-Belted Wide-Profile Tries, Special- ¢ Duty Suspension, Twin-Grip Differential, Heavy-Duty Engine Cooling System and Over-The-Top Racing Stripe in Choice of Black, White, Red, Blue or Silver	PP1	E
390 "Go" Package - same as above except 390 CID, 315 HP engine	PP2	E
Twin-Grip Differential	TGD	E
Quick-Ratio Manual Steering	QRM	E
Transmissions:		
Shift Command, Floor Shift with Console	C	E
4-Speed Full-Synchro, Close Ratio Floor Shift	M	STD
Power Assists:		
Power Steering (recommended with air conditioning)	PS	E
Power Brakes	PB	E
Power Disc Brakes	DB	E
# **Seating Items:**		
Center Armrest and Center Cushion (with 4-speed transmission only)	CAS	E
Radios and Tape Equipment:		
AM Push-Button Radio	RP	E
AM-FM Push-Button Radio	RFM	E
Stereo 8 Tape Player with Manual AM Radio and Two Rear Speakers (NA with above radios)	STR	E
Appearance Items:		
Turbo-Cast Wheel Covers	TC	E
Wire-Wheel Covers	WC	E
"MAG"-STYLED Wheels - 6" Rim Width, 14" Wheels	MAG	E
Bumper Guards - Rear Only	BGR	E

1969 AMX
FACTORY-INSTALLED OPTIONS (cont.)

	Heating and Air Conditioning:	Code	AMX
#	All-Season Air Conditioning (includes heavy-duty engine cooling system and 55-amp alternator)	AC	E
	"Command Air" ventilation system (includes all outlets used with the All-Season air conditioning system and high-capacity, three-speed blower motor)	CA	E
	Solex Glass - Windshield Only	SW	E
	Solex Glass - All Windows (recommended with air conditioning)	SG	E

	Convenience Groups and Items:		
#	Visibility Group - includes clock, remote-control left outside mirror, visor-vanity mirror, electric variable-speed windshield wipers and electric washers	VG	E
	Light Group - includes trunk light, glove-box light, parking brake warning light and lights-on buzzer	LG	E
	Adjust-O-Tilt Steering Wheel	ASW	E

	Heavy-Duty Equipment:		
	Handling Package, Special Duty (includes higher-rate front and rear springs and 1-3/16" piston diameter shocks)	HP	E
	Heavy-Duty Cooling System (includes heavy-duty radiator, power-flex fan and fan shroud)	HDC	E
	Heavy-Duty 70-Amp Battery	HB	E
#	Heavy-Duty 70-Amp Battery and 55-Amp Alternator (for car less air conditioning)	4A7	E
	Engine-Block Heater	BH	E

Miscellaneous:		
Undercoating	UN	E

1969 AMX

Dealer-Installed Accessories

Tissue Dispenser
Compass - Illuminated
Litter Basket and Tissue Dispenser
License Plate Frames
Rubber Floor Mats (pairs)
Fuel Filter Mileage Minder - Extra Fuel Filtration
Rear Deck Luggage Rack
Ski Carrier - Top Mounted
AM Radios
FM/AM Radios
Radio and Tape Player Kit
Locking Gas Caps
Door Edge Guards (2 piece set)
¢ Window Edge Moldings
Visor-Vanity Mirror
Remote-Control Mirrors
Right Hand Rearview Mirrors
Engine Block Heaters - V-8
Bumper Guards - Rear Only
Wire-Wheel Covers
Turbo-Cast Wheel Covers
Air-Conditioning Kits
Courtesy and Glove-Box Light Kits
Parking Brake and Headlight, Warning Buzzer Kits
Power Brake Kits
Rear Window Defogger Kit
Trunk-Light Kit
¢ Fuse Kit
¢ Protective Trim Molding

Dealer-Installed Performance Items

Cold Intake Manifold Conversion Kit
Oil Pressure Ammeter Gauge and Vacuum Gauge Kit - Rally-Pak
Clock Kit
High-Performance Camshaft Kit
¢ Special Ratio Rear Axle Gear Sets
Heat Blocker Manifold Gasket
Forged Connecting Rods
High-Riser Aluminum Manifold and Carburetor
"MAG"-STYLED Wheels
¢ Spoiler

For other Performance items, see AM Performance Activities Manual

1969 A.M.X.

SEAT, TRIM and COLOR AVAILABILITY

			SERIES					"AMX" (Std.)				"AMX" (Opt.)	
			TRIM					VINYL "VENTILAIR"				LEATHER	
			TRIM COLOR					CHARCOAL	PLATINUM	RED	SADDLE	CHARCOAL	SADDLE
MODELS	SEAT TYPES AVAILABLE		"T" CODES					931	932	935	936	931	936
SPORT COUPE	BUCKET SEAT—RECLINING BACK (Std.)		†					F	F	F	F	L	L
	EXTERIOR COLORS	BODY COLOR	RACING STRIPES** BLACK	WHITE	RED	BLUE Metallic	SILVER Metallic						
12 SOLID COLORS—STANDARD	MATADOR RED	39	●	●			●	●	●	●	●	●	●
	CASTILLIAN GRAY, Metallic *(Medium)*	63	●	●	●	●	●	●	●	●	●	●	●
	BEALE ST. BLUE, Metallic *(Medium)*	64	●	●			●	●	●		●	●	●
	REGATTA BLUE, Metallic *(Dark)*	65	●	●		●	●	●	●		●	●	●
	ALAMOSA AQUA, Metallic *(Medium)*	68	●	●			●	●	●		●	●	●
	HUNTER GREEN, Metallic *(Dark)*	71	●	●			●	●	●		●	●	●
	FROST WHITE	72	●		●	●	●	●	●	●	●	●	●
	WILLOW GREEN, Metallic *(Medium)*	75	●	●				●	●		●	●	●
	POMPEII YELLOW	76	●	●				●	●		●	●	●
	BUTTERNUT BEIGE, Metallic *(Medium)*	77	●	●				●	●		●	●	●
	BITTERSWEET ORANGE, Metallic	79	●	●				●	●		●	●	●
	BLACK MINK, Metallic	80		●	●	●	●	●	●	●	●	●	●

**Stripes are available only in optional performance "GO" packages. †Letter codes identify fabric with seat type.

1969 AMX

Competitive Dimensions

	AMX		Corvette		Triumph TR-250	
	'69	'68	'69**	'68	'69	'68
Wheelbase	97.0	97.0	¢ 98.0	98.0		88.0
Length	177.2	177.2	182.5	182.1		156.0
Width	71.6	71.6	69.0	69.2		58.0
Height	51.7	51.7	47.8	47.8		50.0
Front Overhang	39.7	39.7		40.2		NA
Rear Overhang	40.5	40.5		43.9		NA
Front Tread	58.4	58.4	58.7	58.3		49.0
Rear Tread	57.0	57.0	59.4	59.0		48.5
Turning Circle	33.6	33.6		39.9		34.0
Head Room	37.2	37.2		36.2		NA
Leg Room	42.7*	43.3		43.0		NA
Hip Room	57.6	57.6		48.8		NA
Shoulder Room	55.0	55.0		46.9		NA
Usable Luggage Cap.	9.6	9.6		NA		NA

* Due to suspended accelerator pedal

** Anticipated dimensions

JAVELIN

1969
JAVELIN

TABLE OF CONTENTS

Page

New Features

- Product Highlights 1
- New Exterior and Interior Styling Features 2, 3
- New Chassis and Mechanical Features 3
- New Optional Equipment and Optional Equipment Changes 3, 4
- Model and Series Availability 4
- New Safety Features 5

1969 Product

- Standard Safety Features 5, 6
- Series Features and Differentials 7-10
- Retained Standard Features 11, 12
- Engine, Transmission and Rear Axle Availability 13
- Tire Availability 14
- Factory-Installed Options 15-17
- Dealer-Installed Options and Accessories 18
- Exterior Colors, Vinyl Roofs, Two-Tone Combinations and Interior Trim Selections 19
- Dimensions 20
- Competition 21

1969 JAVELIN

Product Highlights

The 1969 Javelin features a new Twin-Venturi, injection-molded ABS grille which utilizes the new bull's-eye emblem of the Javelin. This emblem is also used with a small Javelin script nameplate on both "C" pillars. A new racing stripe of two-color design (two wide outside stripes in the major color are accented by a narrow center stripe of a second color) will be offered in five color combinations. This stripe will be offered as a separate option (deleted as a component of the "Go" package). The "Go" packages will feature twin-hood scoops of almost full hood length.

A new floor-mounted shift mechanism is standard with the three-speed synchromesh transmission and the standard 232 CID engine, or optional 290 CID 200 HP engine. Column shift mechanism is no longer available with the above engine-transmission combinations as of 1969.

A new grab handle is added to the instrument panel just above the glove box. The SST also gets a wood-grained applique over the center portion of the panel and on the front door armrests. A convenience tray between the seats and bright pedal trim are also added to the SST. A "Command Air" instrument panel ventilation system will be offered optionally to enhance the "flo-thru" system ("flo-thru" ventilation remains standard in all Javelins). The "Command Air" system incorporates the air conditioning outlets and a high-capacity, three-speed blower motor and therefore, can be easily and less expensively converted to air conditioning at a later date. A new console featuring a stowage compartment and an ash receiver and courtesy light for the rear compartment will also be offered optionally. This console is available with column shift or automatic console-mounted shift. The interior trim choices are increased with Javelin now offering two standard colors in vinyl and the SST offering five cloth choices (Blue and Platinum are added) and five "Ventilair" vinyl choices (Blue and Platinum are added). A new center armrest and cushion, will be offered optionally not available with console. Further new options are detailed in that section.

A detailed description of the 1969 Javelin follows.

1969 JAVELIN

New Exterior Styling Features

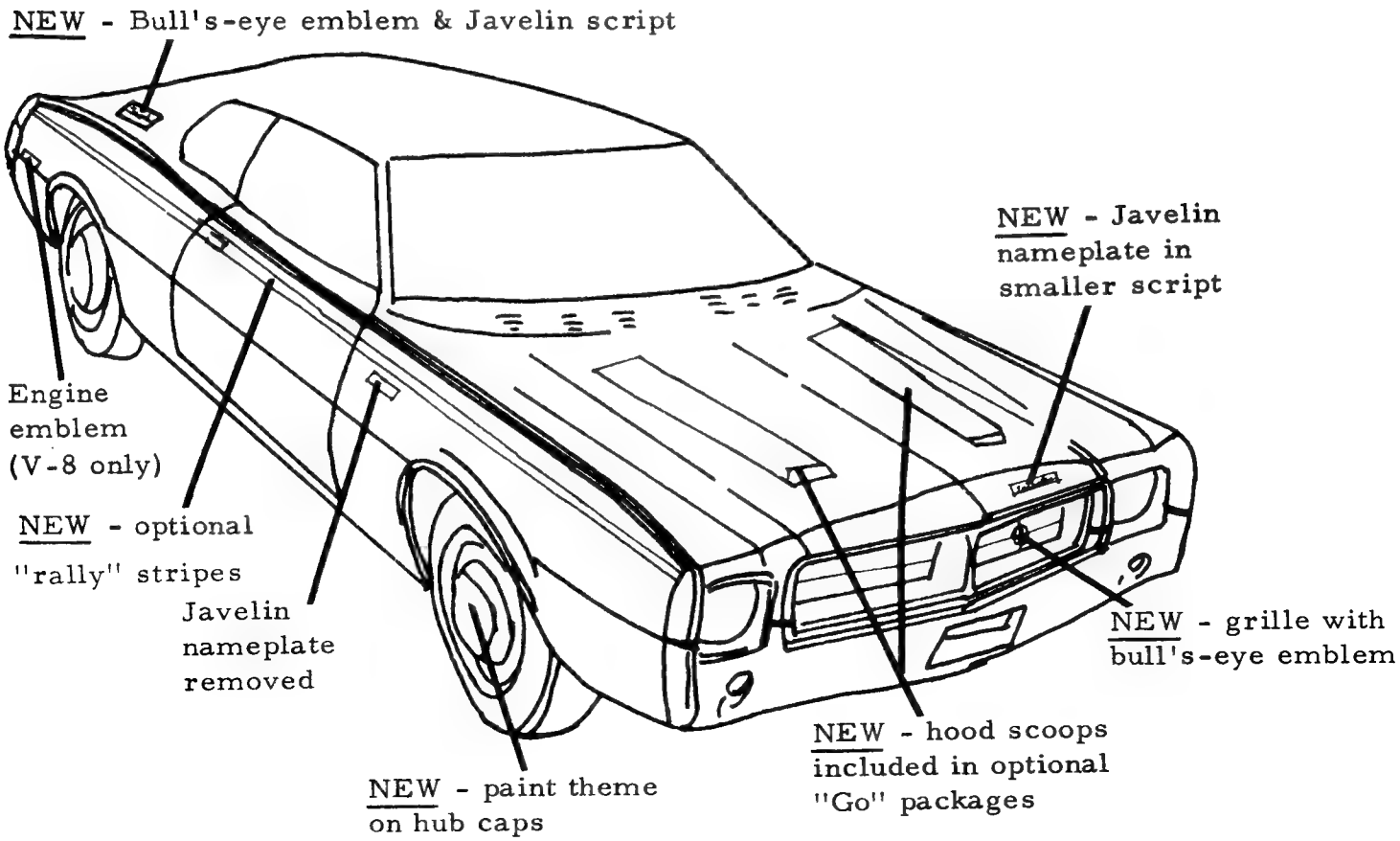

New Interior Styling Features

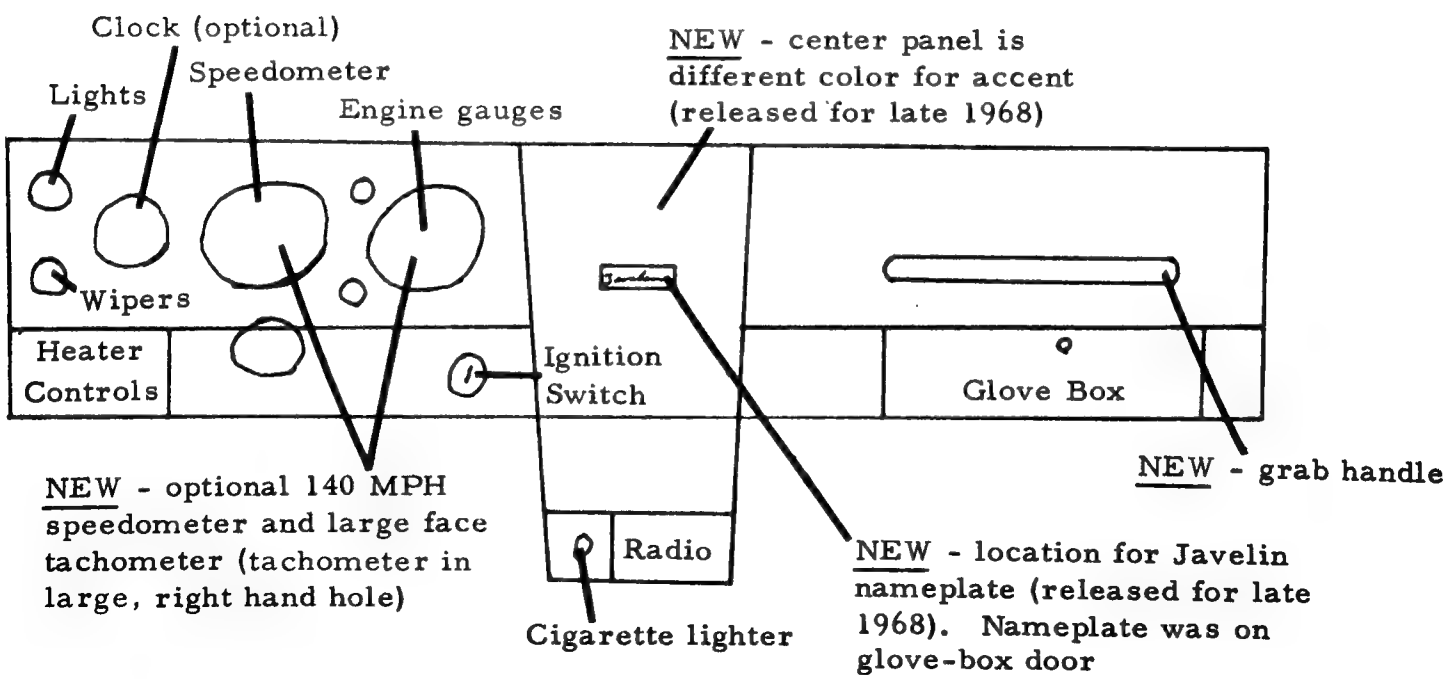

1969 JAVELIN

New Exterior Styling Features

NEW - bull's-eye emblem on grille and "C" pillar
NEW - Javelin nameplate in script on hood, "C" pillar and lower deck panel overlay
NEW - 10 Exterior paint colors (plus two carryover colors)
NEW - paint theme on hub caps and wheel covers

New Interior Styling Features

NEW - grab handle on dash above glove-box door
NEW - accent colored center panel on instrument panel (released for late 1968 model)
NEW - location for Javelin nameplate. Now on center panel (released for late 1968 model)
NEW - door trim panels with deeper dielectric pattern for more padded look
NEW - seat trim designs and cloth patterns (vinyl carryover)

New Chassis and Mechanical Features

NEW - floor shift mechanism standard with base engine (232 CID, 145 HP). Also with optional base V-8 (290 CID, 200 HP)
¢ NEW - "Guard-Glo", the safer head lamp with a reserve filament that continues to glow when main filaments burn out. A safety feature that helps eliminate the "one-eyed" menace
NEW - "Clear-Power 24" battery with transparent, light-weight polypropylene case
NEW - suspended accelerator pedal
NEW - 55-amp alternator (replaces 40-amp) with "All-Season" air-conditioning option

New Optional Equipment

NEW - 14" wheels with 6" rims (standard with "Go" Package) optional with V-8's
NEW - two color rally stripe. Stripe is composed of two wide outer stripes of a base color and a narrow center stripe of an accent color. Stripe is now a straight option and is no longer included in "Go" packages
NEW - hood scoops in flat black are now a part of the "Go" packages which remain as in 1968 except for the replacement of the stripe with the scoops. Also 6" rim width wheels become standard with "Go" package
NEW - center armrest and center cushion (not available with console)
NEW - wood-grained console is available with column or automatic floor shift (mandatory with the latter). Console features stowage, a rear seat courtesy light and a rear seat ash receiver

1969 JAVELIN

NEW OPTIONAL EQUIPMENT (cont.)

NEW - "MAG"-STYLED wheels. Similar to the 1968 chrome wheels but featuring a new paint theme and chrome trim rings
NEW - 140 MPH speedometer and large face tachometer. Not available separately and available with V-8 only
NEW - "Command Air" ventilation system featuring air-conditioning instrument panel outlets and high-capacity, three-speed blower motor

Optional Equipment Changes

NEW - paint theme on wheel covers
290 CID, 200 HP engine is no longer available with 4-speed transmission

No optional interior trim is available on the base Javelin because an additional trim was made standard on this model

NEW - hood scoops replace rally stripe in "Go" package as indicated above. Both "Go" package and stripe can be ordered

Rally-Pak is changed to include a vacuum gauge or a clock. DEALER INSTALLED

Model Availability

	Javelin	Javelin SST	Total
2-Door Hardtop	6979-5	6979-7	2
Total	1	1	2

1969 Models Discontinued - None

1969 Models Added - None

1969 JAVELIN

New Safety Features

Redesigned radio push buttons have larger corner radii to reduce head impact hazard
Two front seat headrests become standard on January 1, 1969

"SAFE-COMMAND" Safety Features
(Standard unless otherwise noted

Construction

Energy absorbing front-end structural design
High-strength thick laminate windshield
Tempered safety glass, side and rear windows
Extra-strength door hinges
Padded pillars and roof headers
Molded ceilings
Padded instrument panel
Break-away front ash receivers
Padded instrument panel
Break-away front ash receivers
Padded sun visors
Non-glare finish on interior and exterior parts

Controls and Instruments

Energy-absorbing steering column
Deep-dish impact absorbing steering wheel
Safety-shaped instrument control knobs
Safety automatic transmission shift pattern
Safety-styled instrument panel layout

Brakes and Wheels

Double-safety brake system with self-adjusting feature
Brake system warning light
Mechanical stoplight switch

1969 JAVELIN

"SAFE-COMMAND" SAFETY FEATURES

Brakes and Wheels (cont.)

Corrosion-resistant brake lines and fittings
Safety-rim wheels
Tread-wear indicators molded into tire tread

Seating and Seat Belts

Seat belts for all seating positions:
a. Standard for all seating positions
b. Two front-seat belts retractable
Two front shoulder belts
Rear shoulder belt anchors installed
Safety-seat and shoulder-belt anchorages
Safety-seat anchorages
Automatic lock with manual release for folding front seats
Front seat headrests
Padded front seat back

Locks and Door Handles

High-strength door locks
"Pre-Set-Impulse" front door locking system
Safety-shaped interior door handles
Flush-contoured outside door handles
Two-key locking system

Accessories and Equipment

4-way hazard warning signals
Lane-changer feature for turn signals
Safety vanity mirror (opt.)
Automatic back-up lights
Shift-command for automatic or manual operation on automatic transmission (opt.)
Day/Night inside rearview mirror with twin pivots and protected edges
Rearview mirror, exterior, left side
Windshield washers - manual (electric opt.)
Non-glare windshield wipers
Vacuum power booster windshield wiper motors (electrical opt.)
Defrosters and defoggers
Side-of-Car safety markers, front and rear
¢ Guard-Glo head lamps
¢ Parking lights illuminated with head lights

1969 JAVELIN

Series Features

JAVELIN (Base):

Exterior:

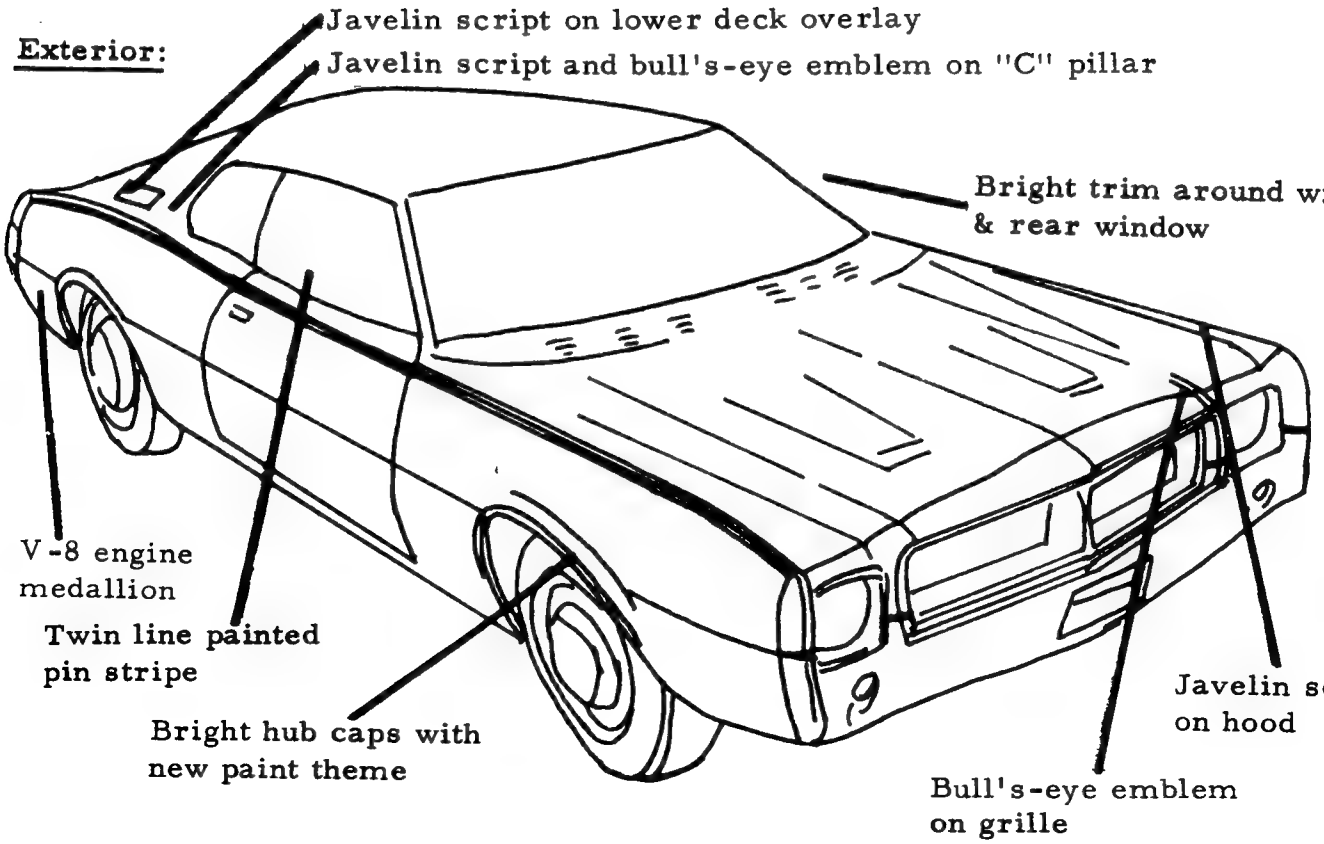

Interior:

Instrument Panel:

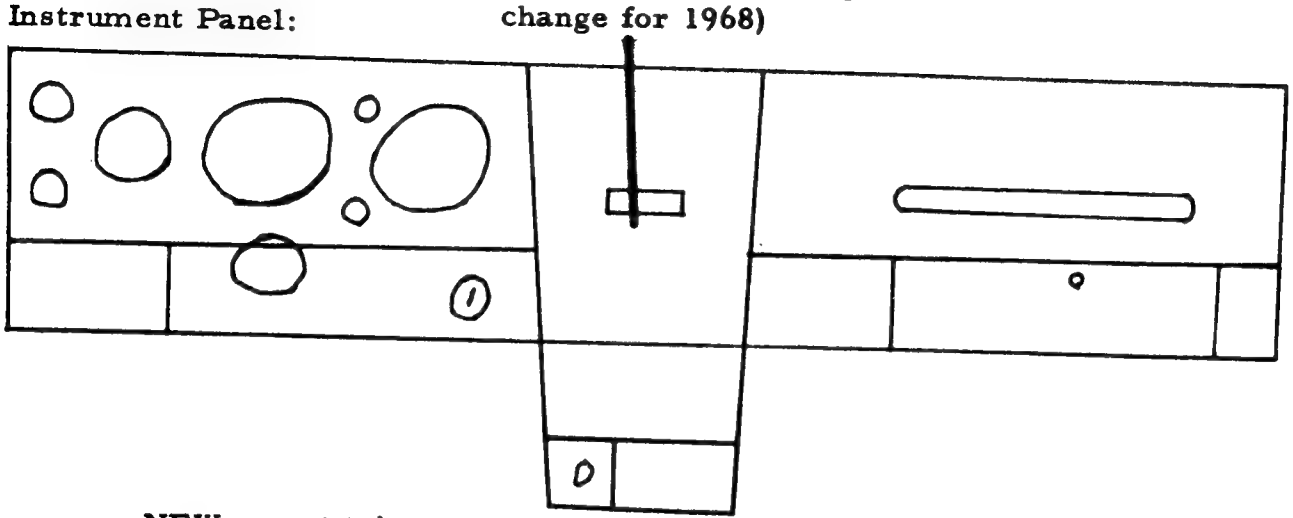

NEW - seat trim patterns in two choices of "Basketweave" vinyl (Charcoal and Parchment)
NEW - door trim patterns with bright trim
NEW - cut pile 100% nylon carpet (running change for late 1968)
NEW - unique door trim panels

1969 JAVELIN

Javelin (Base) Features:

Exterior:

Bright trim around windshield and rear window

Bright hub caps with new paint theme

Twin line, painted pin stripe

Javelin script on hood, "C" pillar and deck upper panel

NEW - bull's-eye emblem on "C" pillars and grille

Interior:

232 CID, 145 HP engine standard

NEW - two-color instrument panel treatment (running change for late 1968)

NEW - seat trim patterns in two choices of "Basketweave" vinyl - Charcoal and Parchment, one more than in 1968. Optional interiors are not offered (one was offered in 1968)

NEW - door trim panels with bright trim

NEW - cut pile, 100% nylon, molded carpet (running change for 1968)

1969 JAVELIN

Series Differentials

JAVELIN SST:

Exterior:

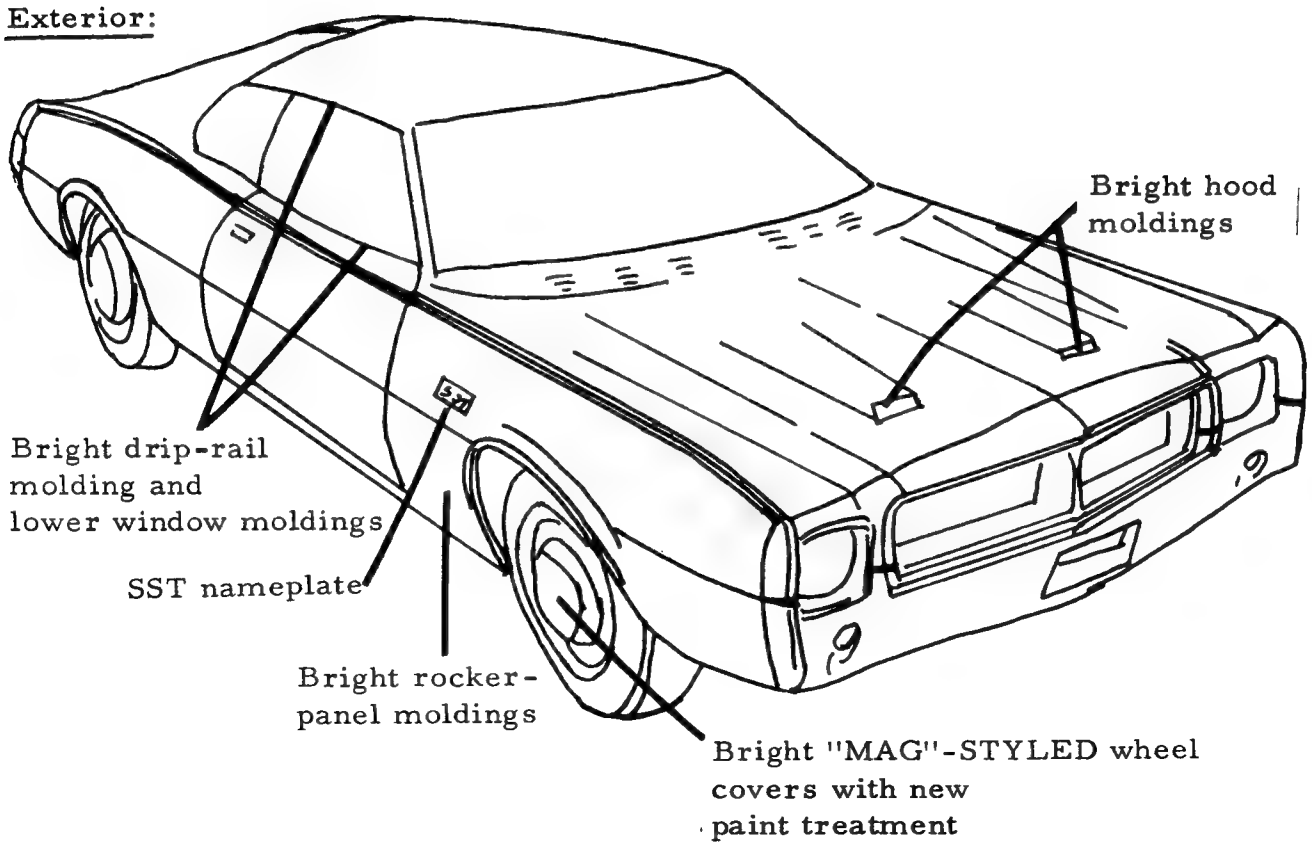

Interior:
Instrument Panel:

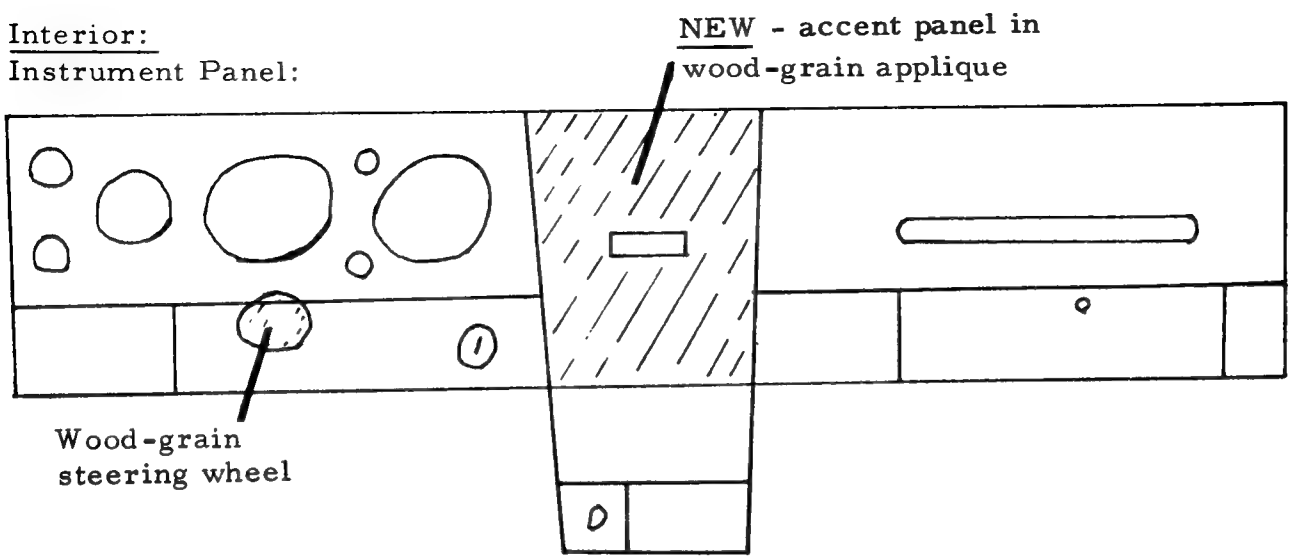

NEW - unique door trim panels with wood-grain applique
NEW - wood-grain applique on armrests
NEW - "Glengarry" cloth seat trim in 5 colors or carryover "Ventilair" vinyl in 5 colors
NEW - 100% nylon, molded, cut pile carpet (running change for late 1968)

1969 JAVELIN

Series Differentials

Javelin SST over Javelin (Base):

Exterior:

Bright rocker panel moldings

Bright drip-rail moldings and lower window moldings

Bright "MAG"-STYLED wheel covers with new paint treatment

Bright scoop recessed moldings

SST emblem on front fenders to the rear of the wheelhouse openings

Interior:

NEW - wood-grain applique on instrument panel

NEW - door trim panels with wood-grain applique, bright trim and SST nameplates

NEW - wood-grain applique on armrests

NEW - seat trim patterns and new cloth designs

NEW - interior color choices in five colors in either cloth or vinyl (two more colors than in 1968)

NEW - between seat convenience tray

NEW - bright pedal trim

Reclining bucket seats

Wood-grained sports steering wheel

1969 JAVELIN

Retained Standard Features

Body:

All-welded, Single-Unit body construction (safe, strong, durable) ("Advanced Unit Construction")
Deep-Dip body rustproofing
Weather-Eye heater
Fresh-air "flo-thru" ventilation
Triple-coated Lustre-Gard acrylic enamel (12 colors)
Dual paint stripes
Molded cushioned acoustical ceiling
Padded "A" pillars and roof headers
Curved "ventless" side-glass
Injection-molded plastic grille and nylon headlight housings
Two-position door checks
Front armrests
Cigarette lighter
Front ash receiver
Full-width carpeting
Formed-wire seat construction
Front seat foam cushion
Bucket seats
Compartment lights
Bin-type glove box with lock
Two coat hooks

Mechanical:

Direct-action, independent coil-spring front suspension with sway bar on V-8's
Rear suspension with semi-elliptical leaf springs
Hypoid-gear rear axle
Self-adjusting brakes with bonded linings
Brake diameter for Sixes 9"; lining area 153.8 square inches
Brake diameter for V-8's 10"; lining area 167.5 square inches
Standard 4-ply-rating, 2-ply tires: 6.95 x 14 on Sixes, 7.53 x 14 on V-8's
Engine-oil filter, full flow
Fuel filters in tank and at carburetor-NEW-in-line filter just ahead of carburetor, was in fuel pump
Fuel-tank approximate capacity, 19 gallons
All-Season engine coolant
Anti-smog positive crankcase vent
"Engine-Mod" exhaust emission control system ("Air-Guard" on V-8's with manual transmission)
Automatic choke
Wheel discs standard on SST

Revised 6-24-68

1969 JAVELIN

RETAINED STANDARD FEATURES (cont.):

Electrical:

Dual horns
Standard 35-amp electronic alternator and sealed transistorized voltage regulator
(NEW - 55-amp with air conditioning)
NEW - "Clear-Power 24" Intercell battery: (was Power-Guard 50-amp standard on Sixes and "290" V-8's, 60-amp standard on "343" and "390" V-8's, 70-amp optional. Name and type of battery changed but electrical characteristics retained
Single head lamps

1969 JAVELIN

Engine, Transmission and Rear Axle Availability

Note: See page 21 for additional engine option - export only

Engine	Transmission	Rear Axle + @ Standard	Rear Axle + @ Opt. **
145 HP Torque-Command 232 CID Six Standard	3-Speed Manual;Floor (std.)	3.08:1	3.31:1 3.58:1
	Shift-Command Automatic; Column (opt.)	3.08:1	3.31:1
# 200 HP Typhoon V-8 290 CID Optional	3-Speed Manual; Floor (std.)	3.15:1	---
	Shift-Command Automatic; Column (opt.)	2.87:1	3.15:1
	Shift-Command Automatic; Console (opt.)	2.87:1	3.15:1
225 HP Typhoon V-8 290 CID Optional	4-Speed Manual;Floor (opt.)	3.54	---
280 HP Typhoon V-8 343 CID Optional	Shift-Command Automatic; Column (opt.)	2.87:1***	3.15:1
	Shift-Command Automatic; Console (opt.)	2.87:1***	3.15:1
	4-Speed Manual;Floor (opt.)	3.54:1	3.15:1
# 315 HP AMX V-8 390 CID* Optional	Shift-Command Automatic; Console (opt.)	2.87:1***	3.15:1
	4-Speed Manual;Floor (opt.)	3.54:1	3.15:1

* Dual exhaust standard (available optionally on 225 HP engine, 280 HP engine and as part of "Go" packages)
** Available at no extra cost
*** 3.15:1 standard with "Go" packages
@+ Also 3.73:1, 3.91:1, 4.10:1, 4.44:1, and 5.00:1 available as extra cost DEALER -INSTALLED options for V-8

1969 JAVELIN

Tire Availability

TIRE SIZE	JAVELIN 6	JAVELIN V-8
6.95 x 14, 4-Ply Rated 2-Ply Rayon (or Vytacord) Black	STD	NA
6.95 x 14, 4-Ply Rated 2-Ply Rayon (or Vytacord) White	OPT	NA
7.35 x 14, 4-Ply Rated 2-Ply Rayon (or Vytacord) Black	OPT	STD
7.35 x 14, 4-Ply Rated 2-Ply Rayon (or Vytacord) White	OPT	OPT
E70 x 14, 4-Ply Rated 2-Ply "Polyglas" (Fiberglass-Belted) Extra Performance Red Line ¢ (With 6" Rim Width Wheel)	OPT	OPT

Revised 6-24-68
* Revised 7-09-68

1969 JAVELIN

Factory-Installed Options

Symbols:
- E - Extra Cost
- NA - Not Available
- STD - Standard

	Code	Javelin (Base)	Javelin SST
Paint and Upholstery:			
Special Application of AM Colors (covers paint colors not offered in a given line)		E	E
Vinyl Covered Roof - Black, White, Blue	BKV WHV BUV	E	E
Engines:			
232 CID, 145 HP Torque Command Six	145	STD	STD
290 CID, 200 HP Typhoon V-8 (2-barrel carburetor)	200	E	E
290 CID, 225 HP Typhoon V-8 (4-barrel carburetor)	225	E	E
343 CID, 280 HP Typhoon V-8 (4-barrel carburetor)	280	E	E
390 CID, 315 HP AMX V-8 (4-barrel carburetor)	315	NA	E
Dual Exhaust for 290 CID, 225 HP or 343 CID, 280 HP engines (standard on 390 CID engine)	DE	E	E
* **Performance Groups and Items:**			
343 "Go" Package - includes 343 CID, 280 HP engine, dual-exhaust system, power front disc brakes, E-70 x 14 red-line fiberglass-belted wide-profile tires, 6" rim width wheels, handling package and dual hood scoops	PP1	E	E
390 "Go" Package - same as above except 390 CID, 315 HP engine	PP2	NA	E
Tachometer (large face in instrument panel) and 140 MPH speedometer (V-8 only)	INC	E	E
Twin-Grip Differential	TGD	E	E
Quick-Ratio Manual Steering	QRM	E	E
# **Transmissions:**			
Shift Command, Column Shift 6-Cylinder	A	E	E
290 CID V-8 (not available with 225 HP engine)		E	E
343 CID V-8		E	E
390 CID V-8		NA	E
Shift Command, Floor Shift with Console (V-8 only but not available with 225 HP engine)	C	E	E
4-Speed Full-Synchro, Close Ratio Floor Shift (for V-8 except 290 CID, 200 HP engine)	M	E	E

Revised 6-24-68

FACTORY-INSTALLED OPTIONS (cont.)

	Code	Javelin (Base)	Javelin SST
Power Assists:			
Power Steering (recommended with air conditioning)	PS	E	E
Power Brakes	PB	E	E
Power Disc Brakes (V-8 only)	DB	E	E
# **Seating Items:**			
Reclining Bucket Seats	SB	NA	STD
Front Armrest and Center Cushion (NA with Console)	CAS	E	E
# Console - incorporates stowage and also ash receiver and courtesy light for rear seat. Available with column shift	CON		
Also included in Floor Mounted Shift-Command option	-	E	E
Radios and Tape Equipment:			
AM Push Button Radio	RP	E	E
AM/FM Push Button Radio	RFM	E	E
Stereo 8 Tape Player and Manual AM Radio and 2 rear speakers (NA with above radios)	STR	E	E
Appearance Items:			
Rally Side Stripes (replaces pin stripes)			
Black-Orange Accent	BKS	E	E
White-Orange Accent	WHS	E	E
Red-Silver Accent	RES	E	E
Blue-Silver Accent	BUS	E	E
Gold-White Accent	GOS	E	E
Custom Steering Wheel	CT	STD	NA
Sports Steering Wheel	SSW	NA	STD
Wheel Discs	WD	E	STD
Turbo-Cast Wheel Covers	TC	E	E
Wire-Wheel Covers	WC	E	E
"MAG"-STYLED Wheels - 6" rim width, 14" wheels	MAG	E	E
Bumper Guards - Rear Only	BGR	E	E
Heating and Air Conditioning:			
# All-Season Air Conditioning (includes heavy-duty engine cooling system and 55-amp alternator)	AC	E	E

FACTORY-INSTALLED OPTIONS (cont.)

Heating and Air Conditioning (cont.):	Code	Javelin (Base)	Javelin SST
"Command Air" Ventilation System (includes all ventilation outlets used with the All-Season Air-Conditioning System and high-capacity, three-speed blower motor	CA	E	E
Solex Glass - Windshield Only	SW	E	E
Solex Glass - All Windows (recommended with air conditioning)	SG	E	E
Convenience Groups and Items:			
Visibility Group - includes remote-control left outside mirror, clock, visor-vanity mirror, electric variable-speed windshield wipers and electric washers	VG	E	E
Light Group - includes trunk light, two courtesy lights, glove-box light, parking brake warning light and lights-on buzzer	LG	E	E
Adjust-O-Tilt Steering Wheel (not available with manual column shift)	ASW	E	E
¢ **Heavy-Duty Equipment:**			
Handling Package, 6-Cylinder - includes front sway bar, heavy-duty springs and shocks	HP	E	E
Handling Package, V-8 - includes heavy-duty sway bar (sway bar is standard on V-8's), heavy-duty springs and shocks	HP	E	E
Heavy-Duty Cooling System - includes heavy-duty radiator, power-flex fan and fan shroud	HDC	E	E
Heavy-Duty 70-Amp Battery	HB	E	E
# Heavy-Duty 70-Amp Battery and 55-Amp Alternator (for car less air conditioning)	4A7	E	E
# Heavy-Duty Clutch with 3-Speed Transmission and V-8 only		E	E
Engine Block Heater	BH	E	E
Automatic Transmission Oil Cooler (standard with V-8)	ATC	E	E
Miscellaneous:			
Insulation Group - includes undercoating and hood insulation	ING	E	E
Space-Saver Spare Tire	EST	E	E

1969 JAVELIN

Dealer-Installed Accessories

Tissue Dispenser
Compass-Illuminated
Litter Basket and Tissue Dispenser
License Plate Frames
Spare Tire Covers
Rubber Floor Mats (Pairs-Front and Rear)
Load Levelers
Fuel Filter Mileage Minder - Extra Fuel Filtration
Rear Deck Luggage Rack
Ski Carrier - Top Mounted
AM Radio
FM/AM Radio
Radio and Tape Player Kit
Rear Seat Speakers
Locking Gas Caps
Door Edge Guards (2 piece sets)
Window Edge Moldings
Visor-Vanity Mirror
Remote-Control Mirrors
Right Hand Rearview Mirrors
Engine Block Heaters Six and V-8
Bumper Guards - Rear only
Wheel Covers
Wire-Wheel Covers
Turbo-Cast Wheel Covers
Air-Conditioning Kits
Courtesy and Glove-Box Light Kits
Parking Brake and Headlight Warning Buzzer Kits
Power Brake Kits
Rear Shoulder-Belt Kits
Trunk-Light Kit
¢ Fuse Kit
¢ Protective Trim Molding
Cold Intake Manifold Conversion Kit
Tachometer Kit
Oil Pressure Ammeter Gauge and Clock or Vacuum Gauge Kit - Rally-Pak
Clock Kit
High-Performance Camshaft Kit
Dual Exhaust
Rear Traction Bars
Special Ratio Rear Axle Gear Sets
Heat Blocker Manifold Gasket
Forged Connecting Rods
High-Riser Aluminum Manifold and Carburetor
"MAG"-STYLED Wheels
¢ Spoiler

For other Performance items, see AM Performance Activities Manual.

1969 JAVELIN

SEAT, TRIM AND COLOR AVAILABILITY

SERIES	JAVELIN		"JAVELIN SST"									
TRIM	2 VINYL BASKET		CLOTH "GLENGARRY"					VINYL "VENTILAIR"				
TRIM COLOR	CHARCOAL	PARCHMENT	CHARCOAL	PLATINUM	BLUE	RED	BEIGE	CHARCOAL	PLATINUM	BLUE	RED	BEIGE
MODELS / SEAT TYPES AVAILABLE / "T" CODES	961	968	961	962	963	965	966	961	962	963	965	966
2 DR. HARDTOP — BUCKET SEAT—NON-RECLINING BACK (Std.) †	J	J										
2 DR. SST-HT — BUCKET SEAT—RECLINING BACK (Std.)			E	E	E	E	E	F	F	F	F	F

	EXTERIOR COLORS	BODY COLOR	WHEEL COLOR	**RECOMMENDED RALLY STRIPES: BLACK	WHITE	RED	BLUE	GOLD	STD. PAINT STRIPE	961	968	961	962	963	965	966	961	962	963	965	966
12 SOLID COLORS—STANDARD	MATADOR RED	39	39	●	●				White	●1	●1	●1	●1		●1		●1	●1		●1	
	CASTILLIAN GRAY, Metallic *(Medium)*	63	80	●	●	●	●	●	Black	●1	●1	●1	●2	●2	●1		●1	●2	●2	●1	
	BEALE ST. BLUE, Metallic *(Medium)*	64	65	●	●				White	●2	●2	●2	●2	●2			●2	●2	●2		
	REGATTA BLUE, Metallic *(Dark)*	65	65		●		●	●	White	●2	●2	●2	●2	●2			●2	●2	●2		
	ALAMOSA AQUA, Metallic *(Medium)*	68	68	●	●				Black	●1	●1	●1	●1				●1	●1			
	HUNTER GREEN, Metallic *(Dark)*	71	71	●	●			●	White	●1	●1	●1	●1			●1	●1	●1			●1
	FROST WHITE	72	80	●		●	●	●	Black	●1	●1	●1	●2	●2	●1	●2	●1	●2	●2	●1	●2
	WILLOW GREEN, Metallic *(Medium)*	75	75	●	●			●	Black	●1	●1	●1	●1			●1	●1	●1			●1
	POMPEII YELLOW	76	75	●					Black	●1	●1	●1	●1				●1	●1			
	BUTTERNUT BEIGE, Metallic *(Medium)*	77	78	●	●				Black	●1	●1	●1	●1			●1	●1	●1			●1
	BITTERSWEET ORANGE, Metallic	79	79	●	●				Black	●1	●1	●1	●1			●1	●1	●1			●1
	BLACK MINK, Metallic	80	80		●	●	●	●	White	●1	●1	●1	●2	●2	●1	●1	●1	●2	●2	●1	●1

†Letter codes identify fabric with seat type.
**Recommended Rally Stripes are listed by stripe color and matching accent stripes below.
Where Rally Stripes are used paint stripes are omitted.

STRIPES	ACCENT	CODE
1. BLACK	ORANGE RED	BKS
2. WHITE	ORANGE RED	WHS
3. RED	SILVER METALLIC	RES
4. BLUE METALLIC	SILVER METALLIC	BUS
5. GOLD METALLIC	WHITE	GOS

OPTIONAL "LEVANT" GRAIN VINYL COVERED ROOF
1BLACK OR WHITE 2BLACK, WHITE OR BLUE *(MEDIUM)*

Revised 6-24-68
¢ Revised 8-12-68

1969 JAVELIN

Competitive Dimensions

SPECIALITY AUTOMOBILES

	Javelin		Mustang		Cougar		Camaro		Barracuda	
	'69	'68	'69**	'68	'69**	'68	'69**	'68	'69**	'68
Wheelbase	109.0	109.0	¢ 108.0	108.0	¢ 111.1	111.0	¢ 108.0	108.0	¢ 108.0	108.0
Length	189.2	189.2	187.4	183.6	193.8	190.3	186.0	184.6	192.8	192.8
Width	71.9	71.9	71.3	70.9	74.2	71.3	74.0	72.3	69.6	71.6
Height	51.8	51.8	51.2	51.6	51.3	51.7	51.4	50.9	53.0	52.6
Front Overhang	39.7	39.7		35.1	36.5	35.1		36.6		35.2
Rear Overhang	40.5	40.5		40.5	46.1	44.1		40.0		49.6
Front Tread	57.9	57.9	58.5	58.5		58.5	59.6	59.6	57.5	57.4
Rear Tread	57.0	57.0	58.5	58.5		58.5	59.5	59.5	55.6	55.6
Turning Circle	36.9	36.9		37.6		38.1		39.9		37.8
Head Room, Front	37.5	37.5	37.4	37.4	37.4	37.3	37.6	37.0	37.2	37.4
Head Room, Rear	36.0	36.0	35.8	35.8	35.8	35.8	36.6	36.7	36.5	35.8
Leg Room, Front	42.7*	43.3	41.1	42.0	41.1	42.7	42.5	42.5	41.7	41.7
Leg Room, Rear	31.5	31.5	29.5	27.0	30.5	29.8	29.2	29.2	31.1	30.2
Total Leg Room	# 74.2	74.8	70.6	69.0	71.6	72.5	71.7	71.7	72.8	71.9
Hip Room, Front	57.6	57.6	55.6	54.0	56.8	54.2	56.3	56.3	57.1	57.1
Hip Room, Rear	56.4	56.4	51.3	50.8	52.4	53.4	54.6	54.6	57.2	57.2
Shoulder Room, Front	55.0	55.0	56.0	53.4	55.9	53.9	56.7	56.7	55.4	55.4
Shoulder Room, Rear	53.2	53.2	54.7	53.6	54.5	53.4	53.6	53.6	55.4	55.4
Usable Luggage Cap	10.2	10.2	9.8	9.3	10.2	9.2		8.2		15.2

* Due to suspended accelerator pedal
** Anticipated dimensions

1969 JAVELIN

Competitive Dimensions

SPECIALITY AUTOMOBILES

	Javelin		Mustang		Cougar		Camaro		Barracuda	
	'69	'68	'69	'68	'69	'68	'69	'68	'69	'68
Wheelbase	109.0	109.0	108.0		111.0		108.0		108.0	
Length	189.2	189.2	183.6		190.3		184.6		192.8	
Width	71.9	71.9	70.9		71.3		72.3		71.6	
Height	51.8	51.8	51.6		51.7		50.9		52.6	
Front Overhang	39.7	39.7	35.1		35.1		36.6		35.2	
Rear Overhang	40.5	40.5	40.5		44.1		40.0		49.6	
Front Tread	57.9	57.9	58.5		58.5		59.6		57.4	
Rear Tread	57.0	57.0	58.5		58.5		59.5		55.6	
Turning Circle	36.9	36.9	37.6		38.1		39.9		37.8	
Head Room, Front	37.5	37.5	37.4		37.3		37.0		37.4	
Head Room, Rear	36.0	36.0	35.8		35.8		36.7		35.8	
Leg Room, Front	42.7*	43.3	42.0		42.7		42.5		41.7	
Leg Room, Rear	31.5	31.5	27.0		29.8		29.2		30.2	
Total Leg Room	# 74.2	74.8	69.0		72.5		71.7		71.9	
Hip Room, Front	57.6	57.6	54.0		54.2		56.3		57.1	
Hip Room, Rear	56.4	56.4	50.8		53.4		54.6		57.2	
Shoulder Room, Front	55.0	55.0	53.4		53.9		56.7		55.4	
Shoulder Room, Rear	53.2	53.2	53.6		53.4		53.6		55.4	
Usable Luggage Cap	10.2	10.2	9.3		9.2		8.2		15.2	

* Due to suspended accelerator pedal

1969
Sporty-Speciality
Competition

Mustang	- New (new in 1964)
Camaro	- Reskin (new in 1967)
Barracuda	- Minor Reskin (new in 1967)
Cougar	- New (with Mustang)
Firebird	- Reskin (with Camaro)

1969
RAMBLER

TABLE OF CONTENTS

New Features	Page
- Product Highlights	1
- New Exterior and Interior Styling Features	2
- New Chassis and Mechanical Features	2
- New Optional Equipment and Optional Equipment Changes	2
- Model and Series Availability	3
- New Safety Features	3
1969 Product	
- Standard Safety Features	4, 5
- Series Features and Differentials	6-9
- Retained Standard Features	10, 11
- Engine, Transmission and Rear Axle Availability	12
- Tire Availability	13
- Factory-Installed Options	14-16
- Dealer-Installed Options and Accessories	17, 18
- Exterior Colors, Vinyl Roofs, Two-Tone Combinations and Interior Trim Selections	19-21
- Dimensions	22-25
- Competition	26

1969 RAMBLER

Product Highlights

The Rambler name will be given to the former American series of past years bringing to this line of cars all the tradition of quality and economy for which the Rambler name is famous. The name American will not be used with the series for 1969. The 1969 Rambler will continue to feature compact exterior dimensions with ample interior room and performance.

The 1969 Rambler will be identifiable with a new triangular shaped Red, White and Blue medallion mounted on the leading edge of the front hood and a new Red, White and Blue bar molding on the front fenders.

Progressive design improvements have been added as perfected and styling changes have been minimized to give this series a continuity in styling that makes it wondrously free from maintenance problems and depreciation expense. The Rambler is an excellently balanced vehicle with performance and economy, interior room and comfort, all pleasingly styled and agreeably priced.

The 1969 Rambler will incorporate the across the line chassis changes of parking lights on with headlights, new accelerator cable linkage and suspended accelerator pedal.

Revised 6-24-68
¢ Revised 8-12-68

1969 RAMBLER

New Exterior Styling Features

NEW - triangle, tri-color hood ornament
NEW - exterior paint colors
NEW - tri-color bar molding on front fenders

New Interior Styling Features

NEW - additional trim color added to Rambler (base)
NEW - door trim panels with deeper dielectric pattern for more padded look
NEW - seat trim designs and cloth patterns

New Chassis And Mechanical Features

¢ NEW - "Guard-Glo", the safer head lamp with a reserve filament that continues to glow when main filaments burn out. A safety feature that helps eliminate the "one-eyed" menace
NEW - "Clear-Power 24" battery with transparent, light-weight polypropylene case
NEW - parking and headlights on together
NEW - suspended accelerator pedal and cable linkage
NEW - 55-amp alternator (replaces 40-amp) with "All-Season" air-conditioning option

New Optional Equipment

NEW - Cool-Air air-conditioning price package which includes factory "All-Season" air conditioning, power steering and solex glass (all windows) will be offered

Optional Equipment Changes

Turbo-Cast wheel covers and wire-wheel covers are dropped as a factory option, retained as a dealer option
Disc brakes are dropped, were V-8 only
Tachometer is dropped as a factory option, retained as a dealer option
290 CID, 200 HP engine is dropped on the Rambler (base); 3-speed manual transmission is dropped across the Rambler series on this engine
290 CID, 225 HP engine is available in the Rogue only

1969 RAMBLER

Model Availability

	Rambler (Base)	Rambler 440	Rambler Rogue	Total
2-Door Sedan	6906	---	---	1
4-Door Sedan	6905	6905-5	---	2
Station Wagon	---	6908-5	---	1
Hardtop	---	---	6909-7	1
Total	2	2	1	5

1968 Models Discontinued - None
1969 Models Added - None

1969 RAMBLER

New Safety Features

Redesigned radio push buttons for larger corner radii to reduce head impact hazard

Two front seat restraints become standard on January 1, 1969

1969 RAMBLER

Standard "SAFE-COMMAND" Safety Features

Construction

Energy-absorbing front-end structural design
High-strength thick laminate windshield
Tempered safety glass, side and rear windows
Extra-strength door hinges
Molded ceilings
Padded instrument panel
Break-away front ash receivers
Recessed rear ash receiver
Padded sun visors
Non-glare finish on interior and exterior parts

Controls and Instruments

Energy-absorbing steering column
Deep-dish impact absorbing steering wheel
Safety-shaped instrument control knobs
Safety automatic transmission shift pattern
Safety-styled instrument panel layout

Brakes and Wheels

Double-safety brake system with self-adjusting feature
Brake system warning light
Mechanical stoplight switch
Corrosion-resistant brake lines and fittings
Safety-rim wheels
Tread-wear indicators molded into tire tread

Seating and Seat Belts

Seat belts for all seating positions:
a. Standard for all seating positions
b. Two front seat belts retractable
Two front shoulder-belts
Rear shoulder belt anchors, installed
Safety-seat and shoulder-belt anchorages
Safety-seat anchorages
Automatic lock with manual release for folding front seats on 2-door models
Folding rear-seat-back latches for wagons
Front seat headrests
Padded front seat back

1969 RAMBLER

STANDARD "SAFE-COMMAND" SAFETY FEATURES (cont.)

Locks and Door Handles

High-strength door locks
Safety-shaped interior door handles
Two-key locking system

Accessories and Equipment

4-way hazard warning signals
Lane-changer feature for turn signals
Safety vanity mirror (opt.)
Automatic back-up lights
Shift-command for automatic or manual operation on automatic transmission (opt.)
Day/Night inside rearview mirror with twin pivots and protected edges
Rearview mirror, exterior, left side
Windshield washers - manual (electric opt.)
Non-glare windshield wipers
Vacuum power booster windshield wiper motors (electrical opt.)
Defrosters and defoggers
¢ Guard-Glo head lamps
¢ Parking lights illuminated with head lights

1969 RAMBLER

Series Features

Revised 6-24-68
¢ Revised 8-12-68

Rambler (Base):

Exterior:

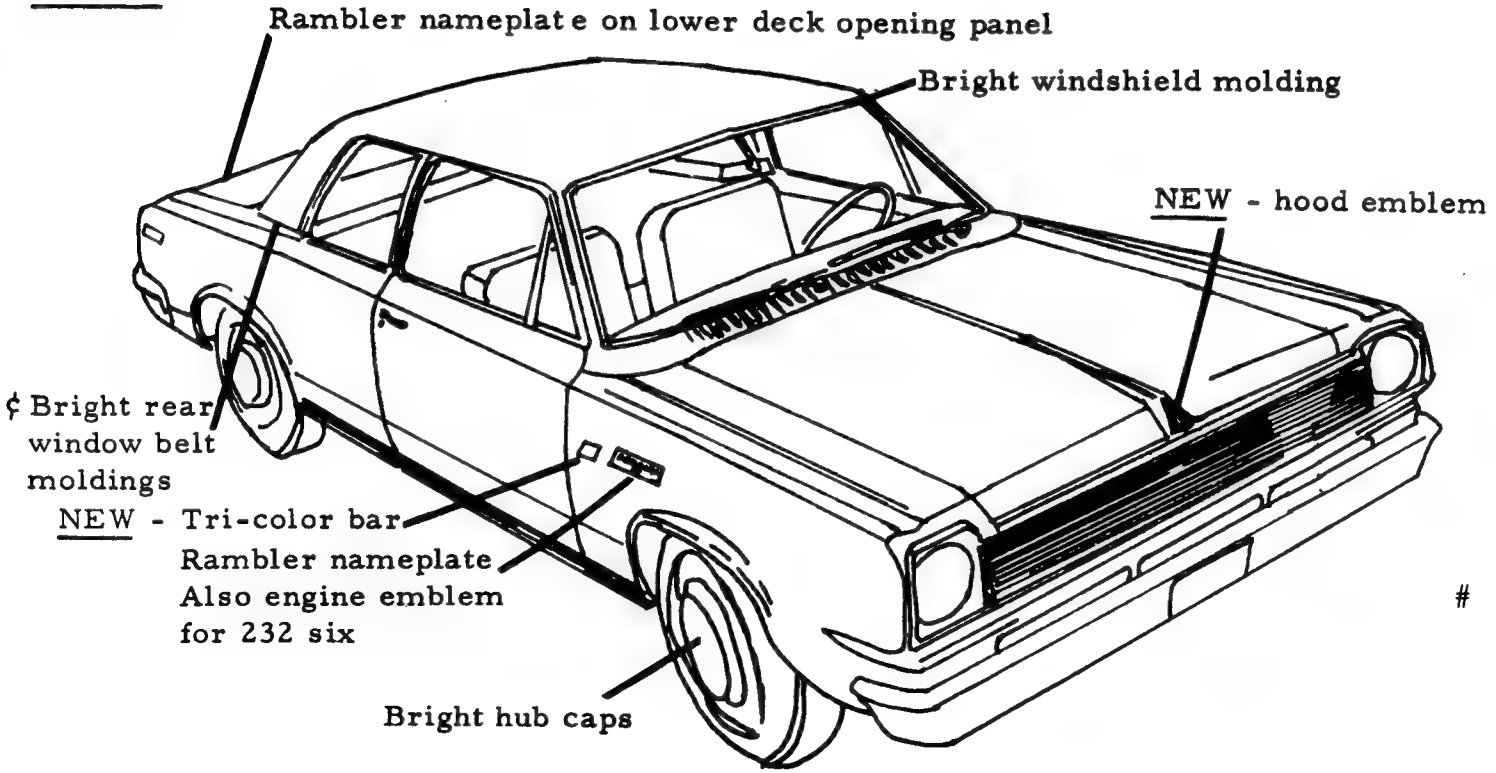

Interior:

Instrument Panel:

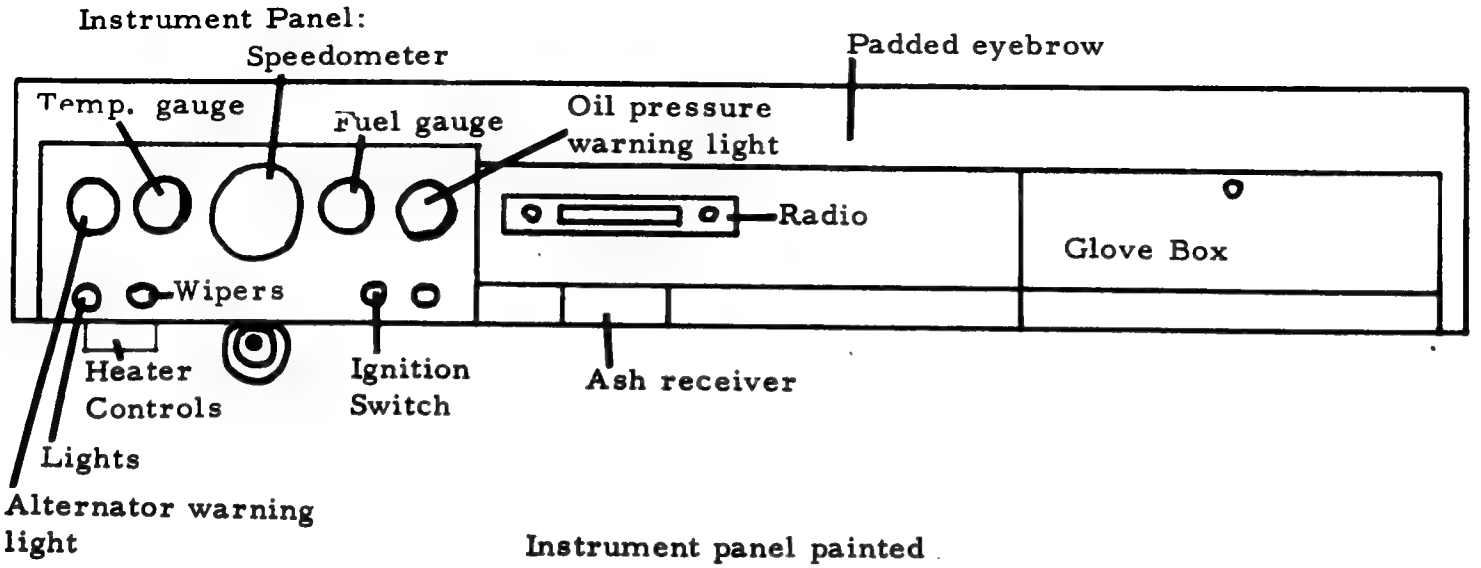

NEW - unique door trim panels with new deeper padded appearance

NEW - "Madison" seat cloth in two colors (charcoal & blue) optional "Basketweave" vinyl is of carryover design but is now offered in the above two colors

1969 RAMBLER

RAMBLER (Base) SERIES FEATURES:

Exterior:

¢ Rambler nameplate on fenders, and on deck lower opening panel
Bright windshield reveal molding
¢ Bright rear window belt moldings
Bright hub caps
6 exterior paint colors (5 new plus Frost White carryover) or one additional over 1968

Interior:

199 cu. in., 128 HP six-cylinder engine standard
NEW - unique door trim panels with new deeper padded appearance
Standard steering wheel with center horn button
Front armrests
Coat hooks
Dome light without door switches
Black rubber floor and trunk mats
Bright instrument moldings

1969 RAMBLER
Series Features

RAMBLER 440 and ROGUE:

Exterior:

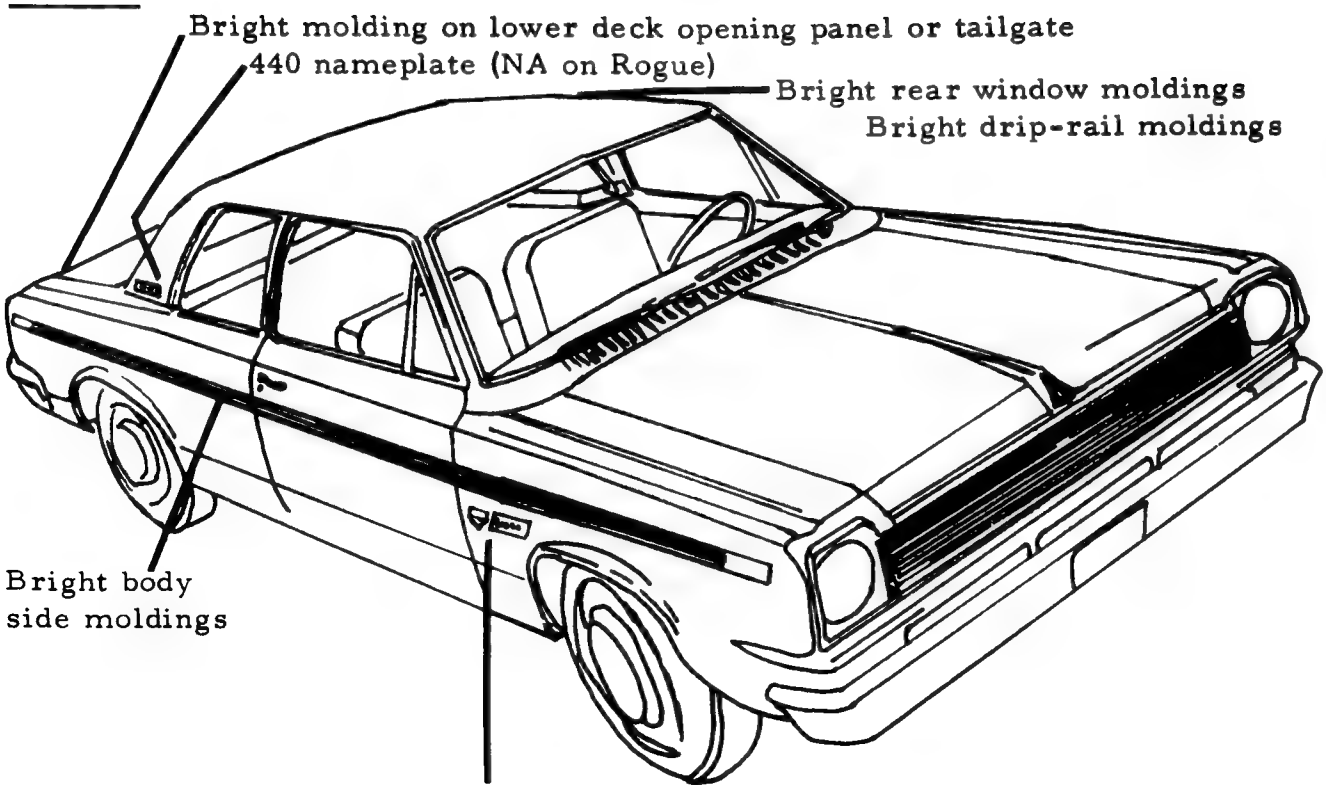

Interior:

Instrument panel

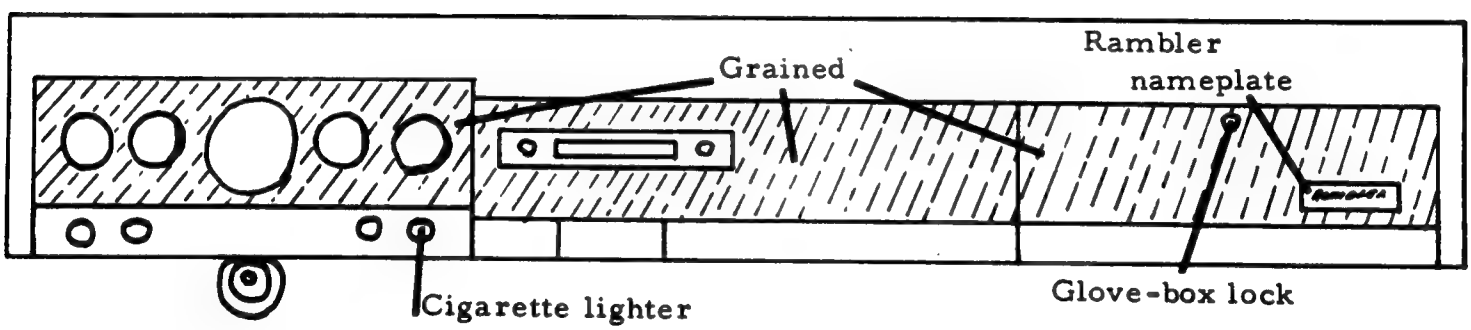

Door trim panel common with base except bright 440 or Rogue nameplate
NEW - "Brigadier" pattern cloth seat trim
Optional "Basketweave" vinyl seat trim is carryover but with NEW seat designs

1969 RAMBLER

SERIES DIFFERENTIALS:

RAMBLER 440 and ROGUE OVER RAMBLER (Base):

Exterior:

"Rambler 440" or "Rogue" nameplates on front fenders to the rear of the wheel opening
"440" nameplate on "C" pillar (NA on Rogue)
Bright body side molding
Bright rear window molding
Bright drip-rail moldings
Bright molding on lower deck opening panel or tailgate

Interior:

Custom steering wheel
Cigar lighter
Glove-box lock
¢ Bright instrument panel applique
Rambler nameplate on glove box
"440" or "Rogue" nameplates on door trim panels
NEW - 100% nylon cut pile carpet
NEW - "Brigadier" pattern cloth seat trims
Rear armrests with ash receivers
Dome or "C" pillar lights with front door switches

1969 RAMBLER

Retained Standard Features

Body:

All-welded, Single-Unit body construction (safe, strong, durable)
Deep-Dip body rustproofing
Weather-Eye heater
Fresh air ventilation
Triple-coated Lustre-Gard acrylic enamel in 11 colors (7 for basic models)
Molded cushioned ceiling
Curved side glass
Extruded aluminum grille
Front armrests
Front ash receiver
Rear ash receivers for 440 and Rogue
Full-width carpeting for 440 and Rogue (rubber for basic models, carpet with 4-speed transmission)
Coil-spring seat construction
Front seat foam cushion
Dome or side pillar lights
Glove-box lock for 440 and Rogue
Two coat hooks

Mechanical:

Direct-action, independent coil-spring front suspension with sway bar on V-8's
Rear suspension with semi-elliptical leaf springs
Hypoid-gear rear axle
Self-adjusting brakes with bonded linings
Brake diameter for Sixes 9"; lining area 153.8 square inches
Brake diameter for V-8's 10"; lining area 167.5 square inches
Standard 4-ply-rating, 2-ply tires; 6.45 x 14 on Sixes (except wagons), 6.95 x 14 on V-8's and Six wagons (see "Options")
Engine-oil filter, full flow
Fuel filters in tank and at carburetor. New in-line filter just ahead of carburetor, was in fuel pump
Fuel-tank approximate capacity, 16 gallons
All-Season engine coolant
Anti-smog positive crankcase vent
"Engine-Mod" exhaust emission control system ("Air-Guard" on V-8's with manual transmission)
Automatic choke

Revised 6-24-68

1969 RAMBLER

RETAINED STANDARD FEATURES (cont.)

Electrical:

Dual horns for 440 and Rogue (one for basic model)
Standard 35-amp electronic alternator and sealed transistorized
voltage regulator (NEW - 55-amp with air conditioning)
NEW - "Clear-Power 24" Intercell battery; was Power-Guard 50-amp
standard, 70-amp optional. Name and type of battery changed but electrical characteristics retained
Single head lamps

1969 RAMBLER

Engine, Transmission And Rear Axle Availability

@

Engine	Transmission	Rear Axle**	
		Std	Opt.*
128 HP Torque-Command '6' 199 CID Standard Rambler and Rambler 440	3-Speed Manual (std.) 3-Speed Manual and Overdrive (opt.) Shift-Command Automatic; Column (opt.) Sedans, HT without AC With AC and Wagons	3.08:1 3.31:1 2.73:1 3.08:1	--- --- 3.08:1 2.73:1
145 HP Torque-Command '6' 232 CID - 1 Bbl. Standard Rogue+ Optional - Rambler and 440	3-Speed Manual (std.) Shift-Command Automatic; Column (opt.)	3.08:1 3.08:1+	3.31:1 3.31:1+
200 HP Typhoon V-8 290 CID, 2 Bbl. Optional 440 and Rogue	Shift-Command Automatic; Column (opt.)	2.87:1	3.15:1
225 HP Typhoon V-8 290 CID, 4 Bbl. Optional Rogue	4-Speed Manual; Floor (opt.)	@ 3.54:1	---

*Available at no extra cost

@ **Also 3.73:1, 3.91:1, 4.10:1, 4.44:1, and 5.00:1 available as extra cost DEALER-INSTALLED options for V-8

+On Rogue with auto. trans. - 2.37:1 Std. and 3.08:1 optional

1969 RAMBLER

Engine, Transmission And Rear Axle Availability

Engine	Transmission	Rear Axle	
		Std	Opt.*
128 HP Torque-Command '6' 199 CID Standard Rambler and Rambler 440	3-Speed Manual (std.)	3.08:1	---
	3-Speed Manual and Overdrive (opt.)	3.31:1	---
	Shift-Command Automatic; Column (opt.)		
	Sedans, HT without AC	2.73:1	3.08:1
	With AC and Wagons	3.08:1	2.73:1
145 HP Torque-Command '6' 232 CID - 1 Bbl. Standard Rogue+ Optional - Rambler and 440	3-Speed Manual (std.)	3.08:1	3.31:1
	Shift-Command Automatic; Column (opt.)	3.08:1+	3.31:1+
200 HP Typhoon V-8 290 CID, 2 Bbl. Optional 440 and Rogue	Shift-Command Automatic; Column (opt.)	2.87:1	3.15:1
225 HP Typhoon V-8 290 CID, 4 Bbl. Optional Rogue	4-Speed Manual; Floor (opt.)	3.54:1**	---

*Available at no extra cost
**Also 3.73:1, 3.91:1, 4.10:1, 4.44:1 available as extra cost DEALER-INSTALLED options
+On Rogue with auto. trans. - 2.37:1 Std. and 3.08:1 optional

1969 RAMBLER

Tire Availability

TIRE SIZES

	SIX CYLINDER		V-8	
	Sedans & Hardtops	Station Wagons	Sedans & Hardtops	Station Wagons
6.45 x 14, 4-Ply Rated 2 Ply Rayon (Or Vytacord) Black	STD	NA	NA	NA
6.45 x 14, 4-Ply Rated 2 Ply Rayon (Or Vytacord) White	OPT	NA	NA	NA
6.95 x 14, 4-Ply Rated 2 Ply Rayon (Or Vytacord) Black	OPT	STD	STD	¢ NA
6.95 x 14, 4-Ply Rated 2 Ply Rayon (Or Vytacord) White	OPT	OPT	OPT	¢ NA
7.35 x 14, 4-Ply Rated 2 Ply Rayon (Or Vytacord) Black	NA	NA	OPT	¢ STD
7.35 x 14, 4-Ply Rated 2 Ply Rayon (Or Vytacord) White	NA	NA	OPT	OPT

Symbols:
E - Extra Cost
NA - Not Available
STD - Standard

1969 RAMBLER

Factory-Installed Options

	Code	Rambler (Base)	Rambler 440	Rambler Rogue
Paint and Upholstery:				
Two-Tone Paint	-1-	E	E	E
Special Application of AM Colors (covers two-tone combinations not offered, paint colors not offered in a given line)		E	E	E
All Vinyl Seat Upholstery (standard on station wagons)		E	E	E
All Vinyl Seat Upholstery for Individual Seat Only		E	NA	NA
Vinyl Covered Roof (Hardtops Only) - Black, Off-White		NA	NA	E
Engines:				
199 CID, 128 HP Torque Command	128	STD	STD	NA
232 CID, 145 HP Torque-Command Six	145	E	E	STD
290 CID, 200 HP Typhoon V-8 (2-barrel carburetor)	200	NA	E	E
290 CID, 225 HP Typhoon V-8 (4-barrel carburetor)	225	NA	NA	E
Dual Exhaust for 290 CID, 225 HP engine	DE	NA	NA	E
Performance Groups and Items:				
Twin-Grip Differential	TGD	E	E	E
Transmissions:				
Shift Command, Column Shift 6-Cylinder and 290 CID, V-8 (not available with 225 HP engine)	A	E	E	E
4-Speed Full-Synchro, Close Ratio Floor Shift (for V-8, 290 CID, 225 HP engine)	M	NA	NA	E
Overdrive Column Shift (128 Only)	O	E	NA	NA

Revised 6-24-68

1969 RAMBLER

FACTORY-INSTALLED OPTIONS (cont.)

	Code	Rambler (Base)	Rambler 440	Rambler Rogue
Power Assists:				
Power Steering (recommended with air conditioning)	PS	E	E	E
Power Brakes	PB	E	E	E
# **Seating Items:**				
Individually Adjustable Reclining Seats	IS	E	E	E
Radios and Tape Equipment:				
AM Push-Button Radio	RP	E	E	E
Appearance Items:				
Appearance Group - includes rocker-panel moldings and wheel discs	APG	E	E	E
Custom Steering Wheel	CR	E	STD	STD
Sports Steering Wheel	SSW	NA	E	E
Wheel Discs	WD	E	E	E
Bumper Guards - Front and Rear (not available on wagons)	BGH	E	E	E
Bumper Guards - Front Only (wagons)	BG2	E	E	E
Heating and Air Conditioning:				
All-Season Air Conditioning (includes heavy-duty engine cooling system, # and 55-amp alternator)	AC	E	E	E
Solex Glass - Windshield Only	SW	E	E	E
Solex Glass - All Windows (recommended with air conditioning)	SG	E	E	E
Convenience Groups and Items:				
*Visibility Group - includes remote-control left outside mirror, visor-vanity mirror, electric variable-speed windshield wipers and electric washers	VG	E	E	E

*** Electric windshield wipers or visibility group must be ordered with V-8**

1969 RAMBLER

FACTORY-INSTALLED OPTIONS (cont.)

	Code	Rambler (Base)	Rambler 440	Rambler Rogue
Convenience Groups and Items (cont.):				
*Electric Windshield Wipers only	EW	E	E	E
Light Group - includes trunk or cargo light, two courtesy lights, glove-box light, parking brake warning light, lights-on warning buzzer and front door switches for basic models	LG	E	E	E
Roof Top Travel Rack (wagon only)	LGR	NA	E	NA
Heavy-Duty Equipment:				
Handling Package, 6-Cylinder - includes front sway bar heavy-duty springs and shocks	HP	# NA	E	E
Handling Package, V-8 - includes heavy-duty sway bar (sway bar is standard on V-8's), heavy-duty springs and shocks and 5-1/2" rim wheels	HP	# NA	E	E
Heavy-Duty Cooling System - includes heavy-duty radiator, power-flex fan and fan shroud	HDC	E	E	E
Heavy-Duty 70-Amp Battery	HB	E	E	E
# Heavy-Duty 70-Amp Battery and 55-amp Alternator (for car less air conditioning)	4A7	E	E	E
# Heavy-Duty Clutch with 3-Speed Transmission only 6-Cylinder	HC	E	E	E
Engine Block Heater	BH	E	E	E
Automatic Transmission Oil Cooler (standard with V-8; NA with 2.37:1 axle ratio)	ATC	E	E	E
Miscellaneous:				
Insulation Group - includes undercoating and hood insulation	ING	E	E	E

* Electric windshield wipers or visibility group must be ordered with V-8

1969 RAMBLER

Dealer-Installed Accessories

Tissue Dispenser
Compass - Illuminated
Litter Basket and Tissue Dispenser
Window Ventshades (except Hardtop)
Window Screens (Pairs - Front and Rear Door)
Child's Safety Vest
Rear Door Child Safety Locks
Spotlight
License Plate Frames
Spare Tire Covers
Load Levelers
Fuel Filter Mileage Minder - Extra Fuel Filtration
Luggage Straps - Pair
Luggage Carrier - Vinyl - All Station Wagons
Luggage Carrier - Vinyl - All Sedans (two sizes)
Ski Carrier - Top Mounted
AM Radios
Locking Gas Caps - All Models
Door Edge Guards (2 and 4 piece sets)
Visor-Vanity Mirror
Remote-Control Mirrors
Right Hand Rearview Mirrors
Engine Block Heaters - Six and V-8
Bumper Guards
Wheel Covers
Wire-Wheel Covers
Turbo-Cast Wheel Covers
Air-Conditioning Kits
Courtesy and Glove-Box Light Kits
Parking Brake and Headlight Warning Buzzer Kits
Power Brake Kits
Rear Shoulder-Belt Kits
Trunk-Light Kit
Cold Intake-Manifold Conversion Kit
Clock Kit
Torque-Link Kit
High-Performance Camshaft Kit
Air-Lift Air Spring
Dual Exhaust
Rear Traction Bars

1969 RAMBLER

DEALER-INSTALLED ACCESSORIES (cont.)

Special Ratio Rear Axle Gear Sets
Heat Blocker Manifold Gasket
Forged Connecting Rods
High-Riser Aluminum Manifold and Carburetor
Chrome Steel Mag Wheels

For other performance items, see

AM Performance Activities Manual

1969 RAMBLER
SEAT, TRIM AND COLOR AVAILABILITY

		SERIES		"RAMBLER"				
		TRIM		CLOTH (Std.)			VINYL (Opt.) "BASKETWEAVE"	
		TRIM COLOR		BLUE "MADISON"	PARCHMENT "MADISON" AFTER APPROX. NOV. 1, '68	GREY & WHITE "SARATOGA" UP TO APPROX. NOV. 1, '68	BLUE	PARCHMENT
MODELS	SEAT TYPES AVAILABLE	"T" CODES		923	928	928	923	928
2 DOOR SEDAN	BENCH CUSHION—NON-RECLINING BACK (Std.)		†	A	A	* A	B	B
	INDIVIDUAL CUSHION—INDIVIDUAL RECLINING BACK (Opt.)			C	C	* C	D ✓	D
4 DOOR SEDAN	BENCH CUSHION—NON-RECLINING BACK (Std.)			A	A	* A	B	B
	INDIVIDUAL CUSHION—INDIVIDUAL RECLINING BACK (Opt.)			C	C	* C	D	D
	EXTERIOR COLORS	BODY COLOR	WHEEL* COLOR					
6 SOLID COLORS—STANDARD	CASTILLIAN GRAY, Metallic *(Medium)*	63	80	●	●	●	●	●
	BEALE ST. BLUE, Metallic *(Medium)*	64	65	●	●	●	●	●
	SURF GREEN, Metallic *(Medium)*	70	71		●	●		●
	FROST WHITE	72	80	●	●	●	●	●
	BUTTERNUT BEIGE, Metallic *(Medium)*	77	78		●	●		●
	BLACK MINK, Metallic	80	80	●	●	●	●	●
6 NON-REVERSIBLE TWO-TONES EXTRA COST OPTION	CASTILLIAN GRAY, Metallic *(Medium)* / FROST WHITE	63 / 72	80	●	●	●	●	●
	CASTILLIAN GRAY, Metallic *(Medium)* / BLACK MINK, Metallic	63 / 80	80	●	●	●	●	●
	BEALE ST. BLUE, Metallic *(Medium)* / FROST WHITE	64 / 72	65	●	●	●	●	●
	SURF GREEN, Metallic *(Medium)* / FROST WHITE	70 / 72	71		●	●		●
	BUTTERNUT BEIGE, Metallic *(Medium)* / FROST WHITE	77 / 72	78		●	●		●
	BLACK MINK, Metallic / FROST WHITE	80 / 72	72		●	●		●

*Wheel color matches body color on Canadian built cars.

†Letter codes identify fabric with seat type.

1969 RAMBLER 440

SEAT, TRIM AND COLOR AVAILABILITY

MODELS	SEAT TYPES AVAILABLE	"T" CODES	941	943	944	941	943	944	945
		SERIES	RAMBLER 440						
		TRIM	CLOTH (Std.) "BRIGADIER"			VINYL (Opt.) "BASKETWEAVE" (Std. on Wagon)			
		TRIM COLOR	CHARCOAL	BLUE	GREEN	CHARCOAL	BLUE	GREEN	RED
4 DOOR SEDAN	BENCH CUSHION—NON-RECLINING BACK (Std.) †		A	A	A	B	B		B
	INDIVIDUAL CUSHION—INDIVIDUAL RECLINING BACK (Opt.)		C	C	C	D	D		D ✓
4 DOOR ST. WAG.	BENCH CUSHION—NON-RECLINING BACK (Std.)					B	B	B	
	INDIVIDUAL CUSHION—INDIVIDUAL RECLINING BACK (Opt.)					D	D	D	

	EXTERIOR COLORS	BODY COLOR	WHEEL* COLOR							
11 SOLID COLORS—STANDARD	MATADOR RED	39	39	●			●			●
	ASCOT GRAY, *(Light)*	62	80	●	●		●	●		●
	CASTILLIAN GRAY, Metallic, *(Medium)*	63	80	●	●		●	●		●
	BEALE ST. BLUE, Metallic *(Medium)*	64	65	●	●		●	●		
	REGATTA BLUE, Metallic *(Dark)*	65	65	●	●		●	●		
	ALAMOSA AQUA, Metallic *(Medium)*	68	68	●			●			
	SURF GREEN, Metallic *(Medium)*	70	71	●		●	●		●	
	FROST WHITE	72	80	●	●	●	●	●	●	●
	POMPEII YELLOW	76	75	●		●	●		●	
	BUTTERNUT BEIGE, Metallic *(Medium)*	77	78	●			●			
	BLACK MINK, Metallic	80	80	●	●	●	●	●	●	●
6 REVERSIBLE TWO-TONES E.C. OPTION	ASCOT GRAY *(Light)* / CASTILLIAN GRAY, Metallic *(Medium)*	62 / 63	80	●	●		●	●		●
	BEALE ST BLUE, Metallic *(Medium)* / REGATTA BLUE, Metallic *(Dark)*	64 / 65	65	●	●		●	●		
	FROST WHITE / BLACK MINK, Metallic	80 / 72	80	●	●	●	●	●	●	●
16 NON-REVERSIBLE TWO-TONES EXTRA COST OPTION	MATADOR RED / BLACK MINK, Metallic	39 / 80	39	●			●			●
	ASCOT GRAY *(Light)* / BLACK MINK, Metallic	62 / 80	80	●	●		●	●		●
	CASTILLIAN GRAY, Metallic *(Medium)* / FROST WHITE	63 / 72	80	●	●		●	●		●
	CASTILLIAN GRAY, Metallic *(Medium)* / BLACK MINK, Metallic	63 / 80	80	●	●		●	●		●
	BEALE ST. BLUE, Metallic *(Medium)* / FROST WHITE	64 / 72	65	●	●		●	●		
	BEALE ST. BLUE, Metallic *(Medium)* / BLACK MINK, Metallic	64 / 80	65	●	●		●	●		
	REGATTA BLUE, Metallic *(Dark)* / ASCOT GRAY *(Light)*	65 / 62	65	●	●		●	●		
	REGATTA BLUE, Metallic *(Dark)* / BLACK MINK, Metallic	65 / 80	65	●	●		●	●		
	ALAMOSA AQUA, Metallic *(Medium)* / FROST WHITE	68 / 72	68	●			●			
	ALAMOSA AQUA, Metallic *(Medium)* / BLACK MINK, Metallic	68 / 80	68	●			●			
	SURF GREEN, Metallic *(Medium)* / FROST WHITE	70 / 72	71	●		●	●		●	
	SURF GREEN, Metallic *(Medium)* / BLACK MINK, Metallic	70 / 80	71	●		●	●		●	
	POMPEII YELLOW / FROST WHITE	76 / 72	75	●		●	●		●	
	POMPEII YELLOW / BLACK MINK, Metallic	76 / 80	75	●		●	●		●	
	BUTTERNUT BEIGE, Metallic *(Medium)* / FROST WHITE	77 / 72	78	●			●			
	BUTTERNUT BEIGE, Metallic *(Medium)* / BLACK MINK, Metallic	77 / 80	78	●			●			

*Wheel color matches body color on Canadian built cars.

†Letter codes identify fabric with seat type.

1969 RAMBLER ROGUE

SEAT, TRIM AND COLOR AVAILABILITY

SERIES			"ROGUE"						
TRIM			CLOTH (STD.) "BRIGADIER"				VINYL (OPT.) "BASKETWEAVE"		
TRIM COLOR			CHARCOAL	BLUE	GREEN	RED	CHARCOAL	BLUE	RED
MODELS	SEAT TYPES AVAILABLE	"T" CODES	941	943	944	945	941	943	945
2 DOOR HARDTOP "ROGUE"	BENCH CUSHION—NON-RECLINING BACK (STD.)		A	A	A	A	B	B	B
	INDIVIDUAL CUSHION—INDIVIDUAL RECLINING BACK (OPT.)		C	C	C	C	D	D	D ✓
	EXTERIOR COLORS	BODY COLOR / WHEEL COLOR							
11 SOLID COLORS—STANDARD	MATADOR RED	39 / 39	●			●	●		●
	ASCOT GRAY, *(Light)*	62 / 80	●	●		●	●	●	●
	CASTILLIAN GRAY, Metallic, *(Medium)*	63 / 80	●	●		●	●	●	●
	BEALE ST BLUE, Metallic *(Medium)*	64 / 65	●	●			●	●	
	REGATTA BLUE, Metallic *(Dark)*	65 / 65	●	●			●	●	
	ALAMOSA AQUA, Metallic *(Medium)*	68 / 68	●				●		
	SURF GREEN, Metallic *(Medium)*	70 / 71	●		●		●		
	FROST WHITE	72 / 80	●	●	●	●	●	●	●
	POMPEII YELLOW	76 / 75	●		●		●		
	BUTTERNUT BEIGE, Metallic *(Medium)*	77 / 78	●				●		
	BLACK MINK, Metallic	80 / 80	●	●	●	●	●	●	●
6 REVERSIBLE TWO-TONES E.C. OPTION	ASCOT GRAY *(Light)* / CASTILLIAN GRAY, Metallic *(Medium)*	62 / 63	80	●	●	●	●	●	●
	BEALE ST. BLUE, Metallic *(Medium)* / REGATTA BLUE, Metallic *(Dark)*	64 / 65	65	●	●		●	●	
	FROST WHITE / BLACK MINK, Metallic	80 / 72	80	●	●	●	●	●	●
16 NON-REVERSIBLE TWO-TONES EXTRA COST OPTION	MATADOR RED / BLACK MINK, Metallic	39 / 80	39	●		●	●		●
	ASCOT GRAY *(Light)* / BLACK MINK, Metallic	62 / 80	80	●	●	●	●	●	●
	CASTILLIAN GRAY, Metallic *(Medium)* / FROST WHITE	63 / 72	80	●	●	●	●	●	●
	CASTILLIAN GRAY, Metallic *(Medium)* / BLACK MINK, Metallic	63 / 80	80	●	●	●	●	●	●
	BEALE ST BLUE Metallic *(Medium)* / FROST WHITE	64 / 72	65	●	●		●	●	
	BEALE ST BLUE, Metallic *(Medium)* / BLACK MINK, Metallic	64 / 80	65	●	●		●	●	
	REGATTA BLUE, Metallic *(Dark)* / ASCOT GRAY *(Light)*	65 / 62	65	●	●		●	●	
	REGATTA BLUE, Metallic *(Dark)* / BLACK MINK, Metallic	65 / 80	65	●	●		●	●	
	ALAMOSA AQUA, Metallic *(Medium)* / FROST WHITE	68 / 72	68	●			●		
	ALAMOSA AQUA, Metallic *(Medium)* / BLACK MINK, Metallic	68 / 80	68	●			●		
	SURF GREEN, Metallic *(Medium)* / FROST WHITE	70 / 72	71	●		●	●		
	SURF GREEN, Metallic *(Medium)* / BLACK MINK, Metallic	70 / 80	71	●		●	●		
	POMPEII YELLOW / FROST WHITE	76 / 72	75	●		●	●		
	POMPEII YELLOW / BLACK MINK, Metallic	76 / 80	75	●		●	●		
	BUTTERNUT BEIGE, Metallic *(Medium)* / FROST WHITE	77 / 72	78	●			●		
	BUTTERNUT BEIGE, Metallic *(Medium)* / BLACK MINK, Metallic	77 / 80	78	●			●		

Available with "Levant" grain vinyl roof in White or Black.

†Letter codes identify fabric with seat type.

Revised 6-24-68
¢ Revised 8-12-68

1969 RAMBLER
Competitive Dimensions
COMPACT AUTOMOBILES
4-DR. SEDANS

	Rambler		Falcon		Chevy II		Valiant	
	'69**	'68	'69**	'68	'69**	'68	'69**	'68
Wheelbase	106.0	106.0	¢ 111.0	111.0	¢ 111.0	111.0	¢ 108.0	108.0
Length	181.0	181.0	184.3	184.5	189.3	189.4	188.4	188.4
Width	70.8	70.8	73.2	73.5	72.4	72.4	69.6	71.0
Height	54.2	54.2	54.9	55.0	53.9	55.3	54.5	53.7
Front Overhang	31.7	31.7		30.5		29.8		31.2
Rear Overhang	43.3	43.3		43.0		48.6		49.2
Front Tread	56.0	56.0	58.8	58.8	59.0	59.0	57.4	57.4
Rear Tread	55.0	55.0	58.5	58.5	58.9	58.9	55.6	55.6
Turning Circle	36.0	36.0		39.8		41.0		37.8
Head Room, Front	39.0	39.0	38.8	39.0		38.8	38.4	38.4
Head Room, Rear	36.6	36.6	38.8	37.5		37.2	37.3	37.3
Leg Room, Front	41.9*	42.0	42.4	42.5		41.6	41.7	41.7
Leg Room, Rear	35.0	35.0	33.8	34.0		35.3	34.5	34.5
Total Leg Room	# 76.9	77.0	76.2	76.5		76.9	76.2	76.2
Hip Room, Front	57.4	57.4	59.5	59.5		56.4		57.2
Hip Room, Rear	57.1	57.1	59.5	59.5		55.1		57.2
Shoulder Room, Front	54.8	54.8	58.0	58.0		56.7	55.4	55.4
Shoulder Room, Rear	54.8	54.8	58.0	58.0		56.2	55.4	55.4
Usable Luggage Cap.	12.0	12.0	12.2	12.5		12.4		14.5

* Due to suspended accelerator pedal
** Anticipated dimensions

Revised 6-24-68
¢ Revised 8-12-68

1969 RAMBLER
Competitive Demensions
COMPACT AUTOMOBILES
2-DR. SEDANS

	Rambler		Falcon		Chevy II		Valiant		VW 1500*	
	'69	'68	'69+	'68	'69	'68	'69+	'68	'69	'68
Wheelbase	106.0	106.0	¢ 111.0	111.0		111.0	¢ 108.0	108.0		94.5
Length	181.0	181.0	184.3	184.5		189.4	188.4	188.4		158.7
Width	70.8	70.8	73.2	73.0		72.4	69.6	71.0		61.0
Height	54.2	54.2	54.9	55.0		55.0	54.5	53.7		59.0
Front Overhang	31.7	31.7		30.5		29.8		31.2		--
Rear Overhang	43.3	43.3		43.0		48.6		49.2		--
Front Tread	56.0	56.0	58.8	58.8		59.0	57.4	57.4		51.6
Rear Tread	55.0	55.0	58.5	58.5		58.9	55.6	55.6		53.3
Turning Circle	36.0	36.0		39.8		41.0		37.8		36.0
Head Room, Front	39.0	39.0	38.8	39.0		37.6	38.4	38.4		39.0*
Head Room, Rear	36.6	36.6	38.8	37.5		36.6	37.3	37.3		33.5*
Leg Room, Front	41.9**	42.0	42.4	42.5		41.6	41.7	41.7		31.5*
Leg Room, Rear	35.0	35.0	33.8	34.0		32.6	34.5	34.5		36.5*
Total Leg Room	# 76.9	77.0	76.2	76.5		74.2	76.2	76.2		68.0*
Hip Room, Front	57.4	57.4	59.5	59.5		56.2		57.2		-- *
Hip Room, Rear	57.1	57.1	58.3	58.5		56.3		57.2		-- *
Shoulder Room, Front	54.8	54.8	58.0	58.0		56.9	55.4	55.4		46.0*
Shoulder Room, Rear	54.8	54.8	56.7	57.0		55.0	55.4	55.4		47.0*
Usable Luggage Cap.	12.0	12.0	12.2	12.5		12.4		14.5		--

*VW Published figures.
Figures obtained through use of AMA Procedures are as follow:
+Anticipated dimensions

	VW 1500	
	'69	'68
Head Room, Front		38.3
Head Room, Rear		35.3
Leg Room, Front		40.3
Leg Room, Rear		--
Total Leg Room		--
Hip Room, Front		38.6
Hip Room, Rear		35.3
Shoulder Room, Front		46.8
Shoulder Room, Rear		47.5

** Due to suspended accelerator pedal

1969 RAMBLER

Competitive Dimensions

COMPACT AUTOMOBILES
4-DR. WAGONS

	Rambler		Falcon	
	'69	'68	'69**	'68
Wheelbase	106.0	106.0	¢113.0	113.0
Length	181.0	181.0	¢198.7	198.7
Width	70.8	70.8	¢ 73.2	74.5
Height	55.2	55.2	¢ 56.4	56.0
Front Overhang	31.7	31.7		30.5
Rear Overhang	43.3	43.3		55.0
Front Tread	56.0	56.0	¢ 58.8	58.8
Rear Tread	55.0	55.0	¢ 58.5	58.5
Turning Circle	36.0	36.0		41.0
Head Room, Front	39.3	39.3	¢ 38.6	38.5
Head Room, Rear	37.0	37.0	¢ 38.6	39.0
Leg Room, Front	41.9*	42.0	¢ 42.4	42.0
Leg Room, Rear	35.5	35.5	¢ 34.5	34.5
Total Leg Room	# 77.4	77.5		76.5
Hip Room, Front	57.4	57.4	¢ 59.5	59.5
Hip Room, Rear	57.1	57.1	¢ 59.5	58.8
Shoulder Room, Front	54.8	54.8	¢ 58.0	58.0
Shoulder Room, Rear	54.8	54.8	¢ 58.0	57.5
Usable Luggage Cap.	66.0	66.0	¢ 85.2	85.2

* Due to suspended accelerator pedal
** Anticipated dimensions

1969 RAMBLER

Competitive Dimensions

COMPACT AUTOMOBILES
2-DR. HARDTOPS

	Rambler '69	Rambler '68
Wheelbase	106.0	106.0
Length	181.0	181.0
Width	70.8	70.8
Height	53.4	53.4
Front Overhang	31.7	31.7
Rear Overhang	43.3	43.3
Front Tread	56.0	56.0
Rear Tread	55.0	55.0
Turning Circle	36.0	36.0
Head Room, Front	38.2	38.2
Head Room, Rear	36.5	36.5
Leg Room, Front	41.9*	42.0
Leg Room, Rear	35.0	35.0
Total Leg Room	# 76.9	77.0
Hip Room, Front	57.4	57.4
Hip Room, Rear	56.4	56.4
Shoulder Room, Front	54.8	54.8
Shoulder Room, Rear	54.2	54.2
Usable Luggage Cap.	12.0	12.0

* Due to suspended accelerator pedal

1969
Compact
Competition

Chevy II	-	Trim and Ornamentation (new in 1968)
Falcon	-	Reskin (new in 1966)
Valiant	-	Trim and Ornamentation (new in 1967)

1969

GENERAL

TABLE OF CONTENTS

	Page
- Corporate Model Availability	1
- General Chassis New Features and Changes	2, 3
- Standard "Safe-Command" Safety Features (which apply to all AM cars)	4, 5
- Retained Standard Features (which apply to all AM cars)	6, 7
- Approved Brand Names and Descriptive Terms	8-10
- History of Past Product Changes	11-18

CORPORATE MODEL AVAILABILITY

Model	2-Door Sedan	4-Door Sedan	4-Door Station Wagon	2-Door Hardtop	2-Door Sports Coupe	TOTAL
1. Ambassador						
Base	- - -	6985-2	- - -	- - -	- - -	1
DPL	- - -	6985-5	6988-5	6989-5	- - -	3
SST	- - -	6985-7	6988-7	6989-7	- - -	3
Sub-Total	0	3	2	2	0	7
2. Rebel						
Base	- - -	6915	6918	6919	- - -	3
SST	- - -	6915-7	6918-7	6919-7	- - -	3
Sub-Total	0	2	2	2	0	6
3. AMX	- - -	- - -	- - -	- - -	6939-7	1
Sub-Total	0	0	0	0	1	1
4. Javelin						
Base	- - -	- - -	- - -	6979-5	- - -	1
SST	- - -	- - -	- - -	6979-7	- - -	1
Sub-Total	0	0	0	2	0	2
5. Rambler						
Base	6906	6905	- - -	- - -	- - -	2
440	- - -	6905-5	6908-5	- - -	- - -	2
Rogue	- - -	- - -	- - -	6909-7	- - -	1
Sub-Total	1	2	1	1	0	5
TOTAL	1	7	5	7	1	21

Total 1969 Models - 21
Total 1968 Models - 24

1969 Models Added - 3:
1. Ambassador SST 4-Dr. Wagon - 2 Seat - 6988-7
2. Rebel SST 4-Dr. Sedan - 6915-7
3. Rebel SST 4-Dr. Wagon - 2 Seat - 6918-7

1968 Models Discontinued - 6:
1. Ambassador 2-Dr. Hardtop - 6889-2
2. Rebel 550 2-Dr. Convertible - 6817
3. Rebel 770 4-Dr. Sedan - 6815-5
4. Rebel 770 Station Wagon - 2 Seat - 6818-5
5. Rebel 770 2-Dr. Hardtop - 6819-5
6. Rebel SST 2-Dr. Convertible - 6817-7

1969

GENERAL

Chassis New Features & Changes

NEW Features:

NEW - suspended accelerator pedal and cable accelerator linkage in all series will provide a more uncluttered appearance and smoother operation

NEW - "Clear-Power 24" battery with translucent polypropylene case. Fluid level can be checked without removing the caps - the "three-in-one" caps continue. Also, battery is now slightly smaller and lighter weight. Electrical characteristics remain the same as in 1968

¢ NEW - "Guard-Glo," the safer head lamp with a reserve filament that continues to glow when main filaments burn out. A safety feature that helps eliminate the "one-eyed" menace.

NEW - parking lights remain on with head lamps

¢ NEW - three additional fusible links, for a total of four, provide more protection for electrical components (main horn wiring, battery feed, accessory and ignition)

NEW - in-line fuel filter is put in gas line just in front of carburetor (old fuel pump filter is dropped)

NEW - crankshaft front seals of the Hydro-dynamic type provide increased reliability

NEW - rear axle seals provide increased reliability

NEW - optional three-speed electric windshield wiper system replaces the variable system in Rebel and Ambassador series. Rambler, Javelin and AMX retain variable-electric wipers as optional

NEW - plastic door edge guards (in clear plastic and about 6" long) are standard for all series

NEW - the word "Safe-Command" will appear on the wide brake pedal of all models on which bright pedal trim is standard

NEW - aluminized exhaust system; Ceramic-Armored system is dropped. New single pipe system on Rebel and Ambassador V-8's is redesigned to increase the engine's ability to breath

NEW - positive acting linkage between key cylinder and lock mechanism on AMX, Javelin, Rebel and Ambassador front doors. This will be an early running change

Revised 6-24-68

CHASSIS NEW FEATURES & CHANGES (cont.)

Changes:

Four-speed floor transmission is dropped for 290 cu. in., 200 HP engines in all series and is dropped completely for Ambassador and Rebel

Red-line wide oval tires (optional) all become fiberglass belted ("Polyglas" tires). AMX retains black-wall fiberglass-belted tires ("Polyglas" tires) as standard

The bed feature of the individual reclining seats in the 4-door models of Rebel and Ambassador is no longer available. This feature is no longer available anywhere in the line

Revised 6-24-68
¢ Revised 8-12-68

1969 AMERICAN MOTORS

Standard "SAFE-COMMAND" Safety Features

These features apply to all American Motors cars.

Accessories and Equipment

- 4-way hazard warning signals
- Lane-changer feature for turn signals
- Back-up lights
- Day/Nite inside rearview mirror with twin pivots and protected edges
- Rearview mirror, exterior, left side
- Windshield washers
- Non-glare windshield wipers
- Defrosters and defoggers
- Side-of-Car safety markers, front and rear
- ¢ Guard-Glo head lamps
- ¢ Parking lights illuminated with head lamps

Brakes and Wheels

- Double-safety brake system with self-adjusting feature
- Brake system warning light
- Mechanical stoplight switch
- Corrosion-resistant brake lines and fittings
- Safety-rim wheels
- Tread-wear indicators molded into tire tread

Seating and Seat Belts

- Seat belts for all seating positions:
  - a. Standard for all seating positions
  - b. Two front-seat belts retractable
- Two front shoulder belts
- Rear shoulder-belts anchors, installed
- Safety-seat and shoulder-belt anchorages
- Automatic lock with manual release folding front seats on 2-door models
- Folding rear-seat-back latches for wagons
- # Front-seat headrests
- Padded front-seat back

Construction

- Energy-absorbing front-end structural design
- High-strength thick laminate windshield
- Tempered safety glass, side and rear windows
- Extra-strength door hinges
- Molded ceilings
- Padded instrument panel

Revised 6-24-68

1969 AMERICAN MOTORS

STANDARD "SAFE-COMMAND" SAFETY FEATURES (cont.)

Construction (cont.)

Break-away front ash receivers
Recessed rear ash receiver
Padded sun visors
Non-glare finish on interior and exterior parts

Locks and Door Handles

High-strength door locks
Safety-shaped interior door handles
Two-key locking system

Controls and Instruments

Energy-absorbing steering column
Deep-dish impact absorbing steering wheel
Safety-shaped instrument control knobs
Safety automatic transmission shift pattern
Safety-styled instrument panel layout

General

The 1969 tape cartridge (included with the optional Stereo Tape Player) will include the safety message, "Is your seat belt fastened?" This message will appear between the second and third tracks only

RETAINED STANDARD FEATURES

These features apply to all American Motors cars.

"Advanced Unit Construction" (exclusive uniside, sedans and wagons)
(impact absorption, front end)

"Deep-Dip" Rustproofing

"Lustre-Gard" Acrylic Enamel (triple coats, backed-on final finish)

Molded-Cushioned Ceilings

Foam-Cushion Front Seat Pads

Curved-Glass Side Windows

Double-Safety Brake System with Self-Adjusting Brakes

Windshield Washers - Manual

Back-Up Lights

Ball-Bearing Ash Receivers

Space-Age Printed Instrument Panel Circuits

Tread-Wear Indicator Molded in Tire Tread

Deep-Coil Spring Front Suspension

Lubed-For-Life Upper Steering Knuckle Bearings

Lubed-For-Life Tie Rods

Electronic Alternator and Transistorized Voltage Regulator

All-Season Engine Coolant

Shift-Command Automatic Transmission (automatic or manual selector)-optional

Automatic Transmission Self-Adjusting Front Band

Full-Pressure Engine Lubrication

RETAINED STANDARD FEATURES (cont.)

Full-Flow Engine Oil Filter

Automatic Choke

Anti-Smog Engine Emission Control

Wedge-Shaped Engine-Combustion Chambers

Coolant Surrounded Engine Valve Seats and Cylinder Walls

Slim-Wall Cast-Iron Engine Block Construction

Over-Square Bore-Stroke Engine Design

On V-8's - Cast Malleable Iron, 5 Main Bearing, Crankshaft

On V-8's - Hydraulic Valve Lifters

On V-8's - Automatic Transmission Oil Cooler

On V-8's - Thermostatically-Controlled Carburetor Air Cleaner

On 6's - 7 Main-Bearing Crankshaft with 8 Counterweights

24,000-Mile Chassis Lubrication

APPROVED PRODUCT BRAND NAMES AND DESCRIPTIVE TERMS

Exterior

"4-Way-Hazard" Warning Signals
"High-Penetration" Strength Glass
"Lustre-Gard" Acrylic Enamel
"Scena-Ramic" Curved Glass Side Windows
"Solex" Glass
"Twin-Venturi" Grille

Interior

"Cushioned-Acoustical" Headliner
"Double-Safety-Pivot" Inside Rearview Mirror
"Individually Adjustable Reclining" Seat
"Molded" Ceilings
"Swing-Pivoting" Front Seat Backs
"Ventilair" Trimmed Seats

Chassis

"Adjust-O-Tilt" Steering
"AMX V-8" Engine
"Air-Guard" Exhaust Emission Control
"Anti-Smog" Engine Vent System
"Autothermic" Steel Strut Reinforced Pistons (Typhoon only)
"Clear-Power 24" Battery (new - '69)
"Conformatic" Steel Ring Reinforced Pistons
"Double-Safety" Brake System
"Electronic" Alternator System
"Energy-Absorbing" Steering Column
"Engine-Mod" Exhaust Emission Control System
"4-Link" Trailing Arm Suspension
"Guard-Glo" Head Lamps
"Four-Coil-Spring" Suspension
"Go" Package
"Lubed-For-Life" Upper Steering Knuckle Bearing
"Lubed-For-Life" Tie Rods
"Matched-Flow" Cylinder Head and Manifold Design
"Open-Prop" Drive
"Power-Flex" Cooling System Fan
"Power-Disc" Brakes
"Quick-Ratio" Manual Steering
"Road-Command" Front Suspension

Revised 6-24-68
¢ Revised 8-12-68

APPROVED PRODUCT BRAND NAMES & DESCRIPTIVE TERMS

Chassis (cont.)

"Shift-Command" Automatic Transmission
"Space-Age" Printed Circuits (Instrument Panel)
"Torque-Command" '6'
"Tread-Wear" Indicator (Tires)
"Twin-Grip" Differential
"Typhoon V-8"

Safety

"Lane-Changer" Turn Signal Switch
"Safety-Shaped" Door Armrests
"Safety-Styled" Instrument Panel
"Smooth-Contoured" Door Handles

General

"Advanced Unit Construction"
"Deep-Dip" Rustproofing
"Flow-Thru" Fresh-Air Ventilation System
"Non-Glare" Windshield Wipers
"Power-Lift" Tailgate Window
"Power-Lift" Windows
"Pre-Set-Impulse" Front Door Locking System
"Pull-Grip" Inside Door Handles
"Pull-to-Open" Vent Windows
"Roof-Top" Travel Rack
"Space-Saver" Spare Tire
"Uniside"

Accessories

"All-Season" Air Conditioning
"Child's Auto-Safety" Vest
"Command Air" Ventilation
"Cruise-Command" Speed Control
"Duo-Coustic" Rear Speaker
"Deep-Dish" Steering Wheel
"Rally-Pack" Dealer Performance Kit
"Road-Control" Power Steering
"Scissors-Action" Tire Jack
"Sports" Steering Wheel
"Turbo-Cast" Wheel Covers
¢ "Weather-Eye" Heating and Ventilating System

APPROVED PRODUCT BRAND NAMES & DESCRIPTIVE TERMS (cont.)

CAR CARE MATERIAL AND EQUIPMENT

-Car Care Material

AM "All-Season" Coolant
"Velv-Oil" Additive
"Sta-Tune"
"Radiator Kleen"

-Accessories and Equipment

"Litter" Basket
"Mileage-Minder" Gas Filter
"Child-Guard" Door Locks

HISTORY OF PRODUCT CHANGES

1968: Two all-new car lines added, Javelin and AMX, and one dropped, Marlin, for a total of 5 car lines with 24 models, two less than in 1967.

Convertibles dropped in Rambler American and Ambassador lines while a low-line convertible was added to the Rebel line. Low-line hardtops were added to Rebel and Ambassador series and a new Ambassador SST 4-door sedan introduced.

Series nomenclature modified to change low-line series identification to series name for Rambler and Ambassador. Mid-line series retain previous year names, but high-line models became Rogue for Rambler American and SST for all others.

All-new Javelin sporty 2-door hardtop introduced in series name and SST model both on 109" wheelbase.

Safety certification included on manufacturer nameplate.

Following safety oriented features introduced to meet or exceed Federal Safety Standards:

- New side-of-car safety markers
- Seat belts for all seating locations
- Shoulder belts for two in front seat (except convertible)
- Rear shoulder-belt anchors
- Folding front seat position lock
- Safety-shaped door armrests
- Safety-styled interior door handles and control knobs
- Safety-padded and styled instrument panel
- Safety coat hooks
- Non-glare interior trim finish
- Inside rearview mirror with twin pivots, protected edges
- Outside rearview mirror relocated
- New door locks
- New mechanical stoplight switch
- New body-structure changes for greater impact absorption
- Smooth contoured outside door handles (except American)
- New padded "A" pillars and roof side headers on Javelin and AMX

Frameless side window glass (Javelin and AMX).

New "flo-thru" fresh-air ventilation introduced (Javelin and AMX).

Air conditioning made standard on Ambassador series, a U.S.-built car exclusive.

HISTORY OF PRODUCT CHANGES (cont.)

1968: Shift-Command available with column shift.

All synchromesh 3-speed manual transmission with addition of synchronized first gear (except 199 CID engine).

"Go" package high-performance options offered for Javelin and AMX.

Shift-Command becomes available with self-adjusting front clutch band.

One-piece injection-molded instrument panel introduced on Javelin and AMX, an industry first.

Front suspension camber, caster, toe-in adjustments moved to lower control arm for easier accessibility.

Formed-wire seat construction used in Javelin and AMX.

New exclusive "Pre-Set-Impulse" front-door locking system introduced (all except American).

Three-in-one vent caps used on Power-Guard "24" Intercell battery.

Exhaust Emission Control required on all domestic cars. "Engine-Mod" system replaces "Air-Guard" air pump system on all engines but V-8's with manual transmission. "Engine-Mod" system incorporates thermostatically-controlled carburetor air cleaner.

September, 1967, American Motors establishes Performance Activities Department to enter competitive performance competition.

Rambler American Rogue wins class in Pure Oil Endurance Competition.

Javelin Quick-Ratio fast steering option offered.

AMX two-seat sports coupe introduced on a 97" wheelbase with V-8 engine and high-performance equipment standard (1968-1/2).

AMX first in industry to have fiberglass-belted polyester tires (Goodyear trade name Polyglas) standard (1968-1/2).

AMX V-8, 390 cubic inch engine introduced as high-performance option (Javelin and AMX) (1968-1/2).

AMX establishes 106 American National and International speed and endurance records (1968-1/2).

"Space-Saver" collapsible spare tire standard on AMX, optional on Javelin (1968-1/2).

HISTORY OF PRODUCT CHANGES (cont.)

1967: All-new product for Rambler Rebel (was called Rambler "Classic"). . .
Wheelbase increased from 112" to 114", length from 195" to 197" (197" wagons).

All-new product for Ambassador . . .
Wheelbase increased from 116" to 118", length from 200" to 202.5" (203" wagons).

All-new product for Marlin . . .
Wheelbase increased from 112" to 118", length from 195" to 201.5".

Hardtop-styled 2-Door Sports Sedan for Rebel and Ambassador.

Rebel and Ambassador convertibles have 6-passenger room, fast roof line.

More interior room for passengers and cargo in Rebel, Ambassador and Marlin.

Rambler American basically same with minor refinements.

343 CID V-8 for all models.

Rebel and Ambassador 3-seat wagons have spare tire.

High-back bucket seats available for top-line models.

8-Track Stereo Tape Player Option (except American).

Wide-Profile, Red-Line, Hi-Performance Tires, V-8 option (except wagons).

Simulated wood-grain "sports" steering wheel option.

5-Year/50,000-Mile Warranty.

Numerous safety features added for all cars:
Warning Light for Double-Safety Brake System
Retractable Front-Seat Belts, Rear-Seat Belts...Shoulder-Belt Anchors
4-Way Hazard Warning Signals...Lane-Changer Turn Signals
Energy-Absorbing Safety Steering Column...3-Spoke 16" Wheel
Double-Pivot, Day/Night Inside Mirror...Tread-Wear Indicator for Tires

Dual exhaust system option for 343 V-8's (Rebel, Ambassador & Marlin)(1967-1/2)

Side-panel two tones for Rebel 770 and Ambassador 990 wagons (1967-1/2).

Limited-Edition "Westerner, Mariner and Briarcliff" Rebel Wagons (1967-1/2).

Hi-Performance Kits available through dealers (1967-1/2).

HISTORY OF PRODUCT CHANGES (cont.)

1966: All-new styling with longer length (177" to 181") for American.

All-new hardtop roof styling for Classic and Ambassador.

All-new wagon roof and tailgate for Classic and Ambassador (and longer length).

Rogue, Rebel and DPL for top-line hardtops.

Torque-Command "199" standard on all Americans.

Torque-Command "232" standard on all Classics.

Flexible-Glass Rear Window for Classic and Ambassador convertible.

Power-Top made standard on American.

Cruise-Command auto. speed control (optional, except American).

4-Speed Transmission for V-8's (optional), console shift (Twin-Stick cancelled).

"Safety Package" made standard.

"Air-Guard" System for California cars (optional).

Self-Adjusting Clutch for 6's (except American).

"Handling Package," optional for American and Classic 6.

Micro-Poise Wheel Balancing.

4-Way Hazard Warning Signals (optional).

Lower-priced Marlin with major equipment changes.

Improved pricing structure with elimination of 330 and 660 models.

Vinyl-Covered Roof optional for Marlin (was hardtops only).

All-new TYPHOON 290 V-8 engine introduced for Rambler American (1966-1/2).

4-Speed Floor Shift for American V-8 (1966-1/2).

HISTORY OF PRODUCT CHANGES (cont.)

1965: All-new Classic with new styling and longer length (190" to 195").

All-new Ambassador with new styling, longer wheelbase (112" to 116") and longer length (190" to 200"). Distinctive look over Classic.

All-new Convertible added to Classic and Ambassador.

All-new Marlin fastback introduced as 1965-1/2 model.

Torque-Command 6 standard on all Classics and Ambassadors.

Torque-Command 6 (232) optional and American.

Power-Disc Brakes (optional, except American), (standard on Marlin).

Shift-Command for 6's (was V-8 only, optional).

Vinyl-Covered Roof for all hardtops as 1965-1/2 option.

"Lustre-Gard" acrylic enamel for all colors (was four colors only).

7-Position Reclining Seat (optional, standard on "H").

Alternator made standard on American (was Classic and Ambassador only).

Extruded Aluminum Grilles for all models.

Ball-Bearing Ash Trays for all models (intro. on 1964, American).

1,000-Mile Inspection Eliminated, initial oil change now 4,000 miles.

New $42-million plant in full operation building new Torque-Command 6's (1964-1/2 intro.) and rear axles.

Heater made standard equipment.

HISTORY OF PRODUCT CHANGES (cont.)

1964: All-new car and styling on longer wheelbase (100" to 106") for American.

6-Passenger Room for American (drop 2-dr. wagon).

Curved Side Glass for American.

All-new hardtop for Classic and Ambassador.

All-new "Torque-Command 6" introduced in 1964-1/2 on new Classic "Typhoon" Hardtop.

Shift-Command Transmission (option for V-8's).

One-Piece Uniside for American (was Classic and Ambassador only).

Acrylic Enamel introduced in four colors.

Front Suspension for American.

32,000 (or 3-year) Chassis Lubrication for American (was Classic and Ambassador only).

Power Steering System (optional).

Cast-Iron '6 made standard on Classic (alum-'6 cancelled).

Alternator made standard on Classic 6 (was V-8 only and A.C.).

AM/FM Radio for Classic and Ambassador (optional).

Adjust-O-Tilt Steering Wheel for Classic and Ambassador (optional).

Front-Seat Belts, standard January 1, 1964 (Retractable Belts optional).

Four Convertible Top Colors for American (was only two).

HISTORY OF PRODUCT CHANGES (cont.)

1963: "24-24" New Car Warranty.

All-new car and styling on longer wheelbase (108" to 112" for Classic and Ambassador).

Minor styling changes for American.

All-new hardtop for American.

Laminated "Foam-n-Fiber" Ceiling for American Hardtop.

All-new model identification (220 up to 990).

Curved Side Glass for Classic and Ambassador.

287 Cu. In. V-8 for 1963-1/2 Classic.

One-Piece Uniside for Classic and Ambassador.

Twin-Stick Floor Shift (optional).

E-Stick Transmission, new option for Classic (was American only).

Lever control for automatic transmission replaces push buttons on Classic and Ambassador.

Alternator made standard on V-8's (& A.C. 6's).

More cargo room for Classic-Ambassador wagons.

More trunk room for Classic-Ambassador sedans.

HISTORY OF PRODUCT CHANGES (cont.)

1958: Classic and Ambassador are all-new cars.
100" Wheelbase American 2-Door Sedan introduced.
"327" V-8 for Ambassador (1957-1/2 Rebel and Ambassador).
"250" V-8 for Classic (1966-1/2 intro.).
Deep-Dip Rustproofing.
Borg-Warner "Flash-O-Matic" automatic replaces Hydra-Matic (1957-1/2).
Twin-Grip Differential optional for V-8's.

1959: Minor styling changes for Classic and Ambassador.
2-Door Wagon added to American line.
Individually-Adjustable Seats (optional).
Headrests (optional).
Air-Coil Ride Suspension, Class and Ambassador (optional, 1959-1/2).

1960: Major styling changes for Classic and Ambassador.
4-Door Sedan added to American line.
American "Custom" model added with OHV engine (1960-1/2).
Side-Hinged Tailgate, Classic and Ambassador 3-seat wagon.
3-rd. Seat Option, Classic and Ambassador.
Bonded Brake Linings.
Twin-Grip Differential optional for 6's (was V-8 only).

1961: Minor styling changes for Classic and Ambassador.
American gets all-new styling on outer-skin.
Convertible and 4-Door Wagon added to American line.
"Custom 400" models for Classic, Ambassador, American (1961-1/2).
Wide Bucket Seats for "Custom 400" models (1961-1/2).
Ceramic-Armored Exhaust System.
Molded Ceilings, Classic and Ambassador.
Lock-O-Matic Door Locks, Classic and Ambassador (optional).

1962: Major styling changes for Classic and Ambassador (both 108" wheelbase).
2-Door Sedan added to Classic and Ambassador.
Minor styling changes for American.
32,000 (or 3-year) Chassis Lubrication on Classic and Ambassador.
Double-Safety Brake System on all models.
Self-Adjusting Brakes on all models.
Galvanized Steel Rocker Panels.
Dowgard coolant (100% option).
Powr-Guard "24", a better battery on all models.
All-Transistor Radios (optional).
Flash-O-Matic (new, improved model for 6's).
E-Stick Transmission (new option for American).
Front Seat Belt Attaching Plates.